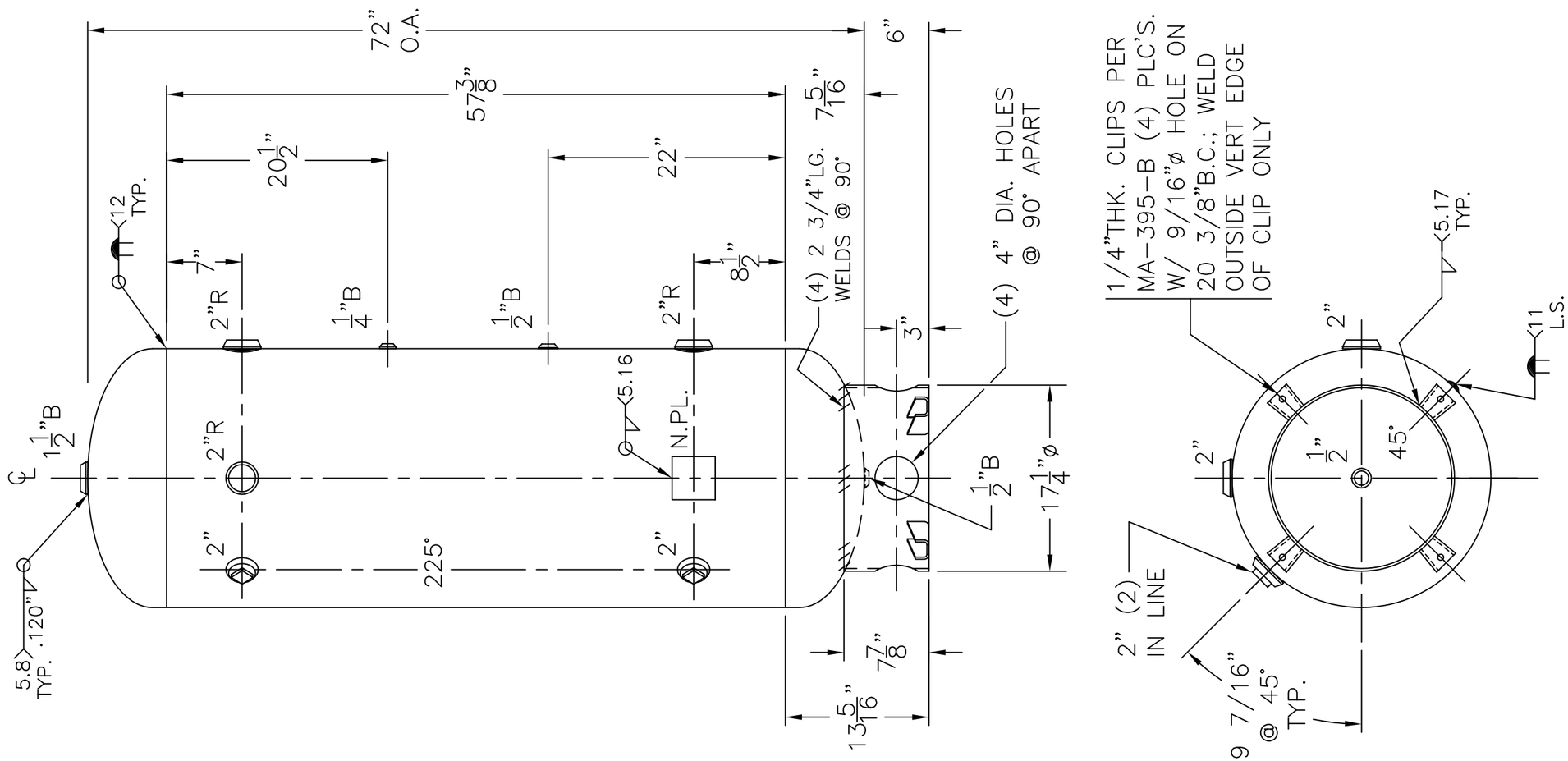

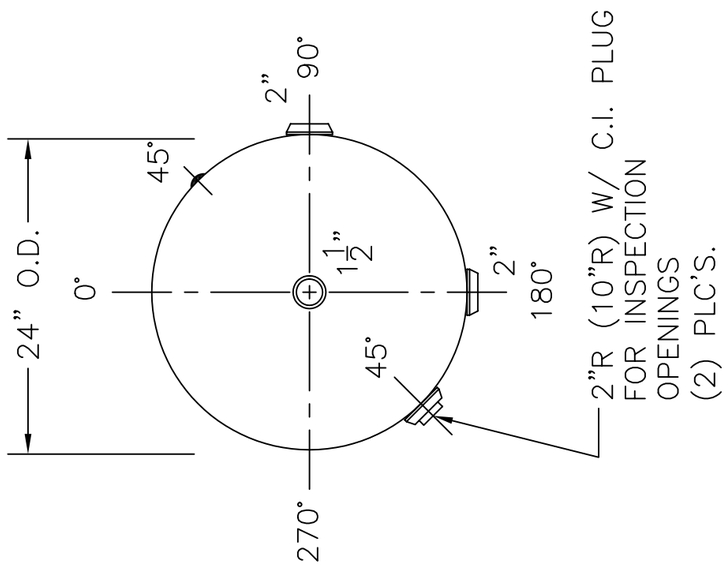

NOTE: 1) HYDRO @ 262 PSIG. MIN.

SHELL / HEADS	.164" SA-414-G 2:1 S.E.	24-VA-130-R	REV. 11-3-06
	JOGGLE		DATE: 11-22-86
		FOR: HANSON STANDARD	
		VERT. AIR TANK	
	.166" SA-414-G		
		INSIDE: UNPAINTED	
M.A.W.P. 200 PSIG. @ 400 °F			
M.D.M.T. -20 °F @ 200 PSIG.		OUTSIDE: PRIME	
ASME. SECTION VIII DIV. 1, 2004 ADD 2005			
X-RAY: RT-NO		BY: E.S.	SCALE: 3/4"=12"
GALLONS: 130	WT. 313 LBS.	ROY E. HANSON JR. MFG.	
SERIAL NO.		1600 E. WASHINGTON BLVD. LOS ANGELES, CA 90021	
N.B.			