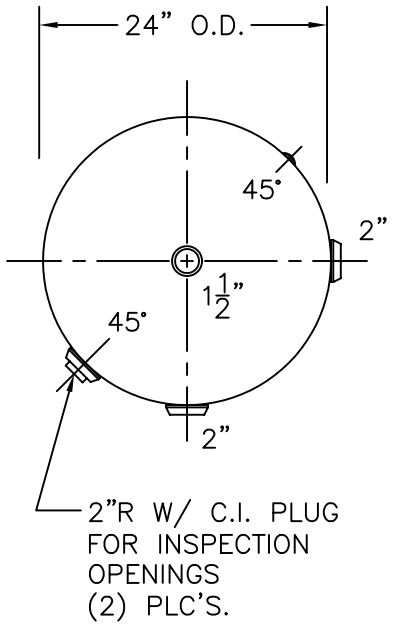

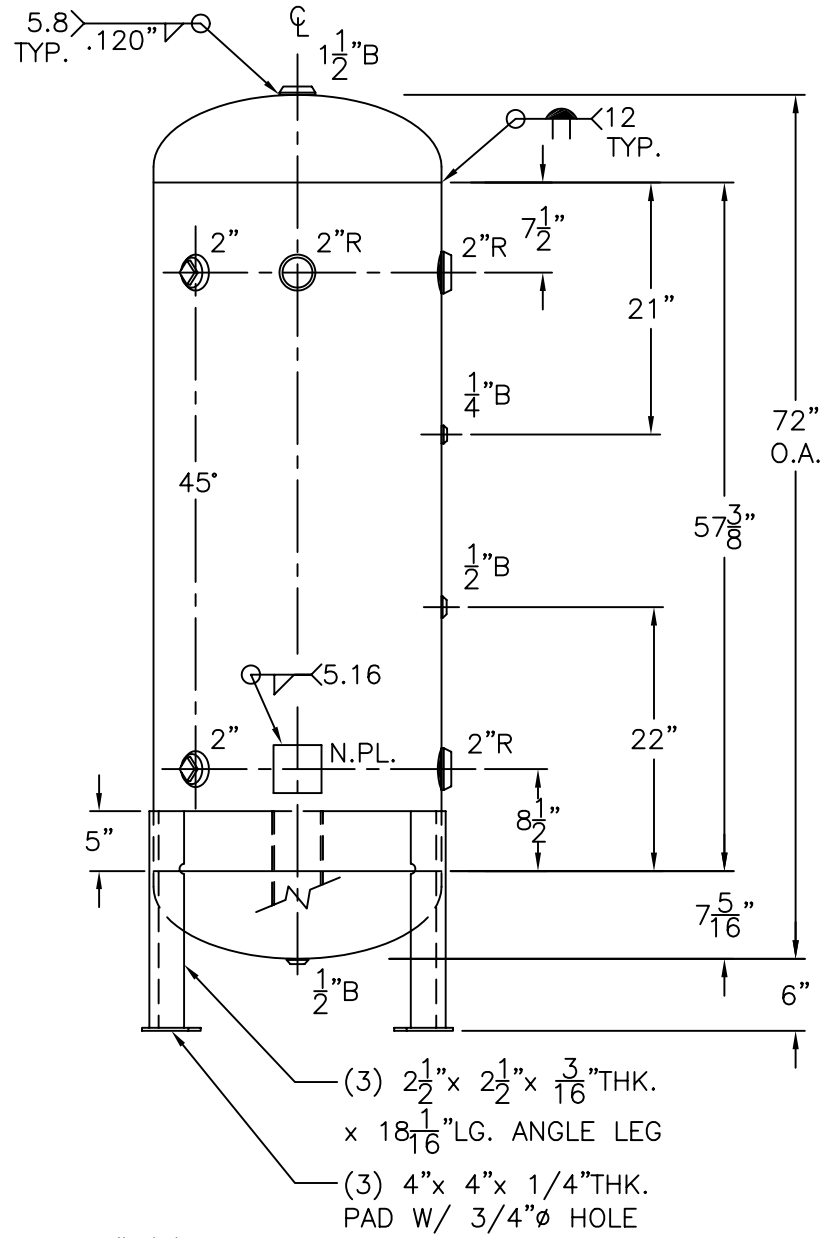

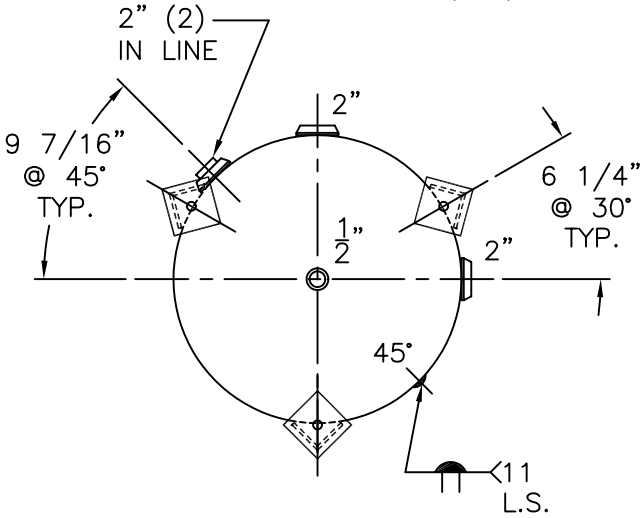

NOTE: 1) HYDRO @ 325 PSIG. MIN.

	.164" SA-414-G 2.1: S.E.
SHELL / HEADS	
	.166" SA-414-G
M.A.W.P.	250 PSIG. @ 400 °F
M.D.M.T.	-20 °F @ 250 PSIG.
ASME. SECTION VIII DIV. 1, 2001 ADD 2002	
X-RAY:	RT-4 SPOT L.S. ONLY
GALLONS: 130	WT. 313 LBS.
SERIAL NO.	
N.B.	

24-VC-130-L	REV. 7-24-03
FOR: HANSON STANDARD	DATE: 6-28-93
VERT. AIR TANK	
INSIDE: UNPAINTED	
OUTSIDE: PRIME	
LEG-ZONE 4-15 KM.	
BY: E.S.	SCALE: 3/4"=12"

ROY E. HANSON JR. MFG.
1924 COMPTON AVE.
LOS ANGELES, CA 90011