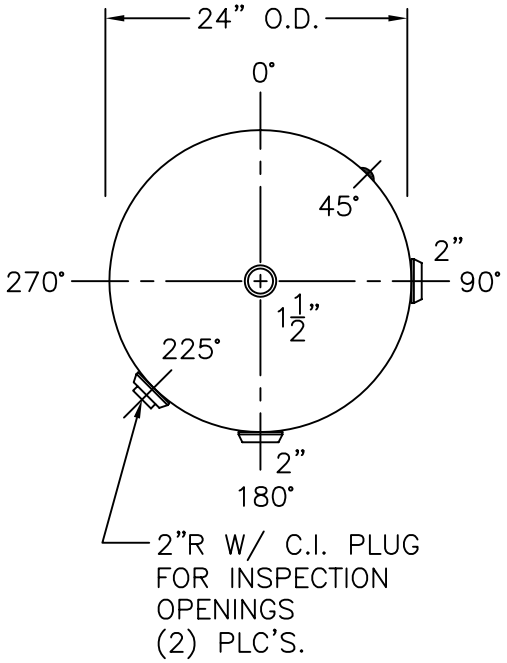

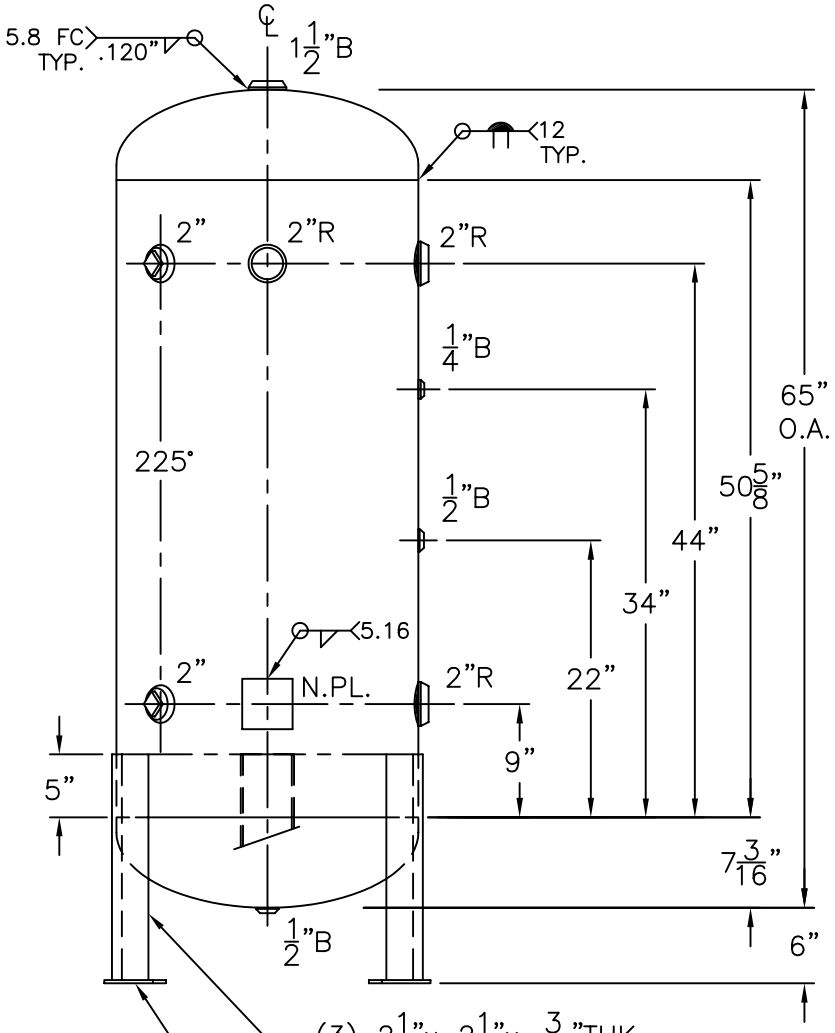

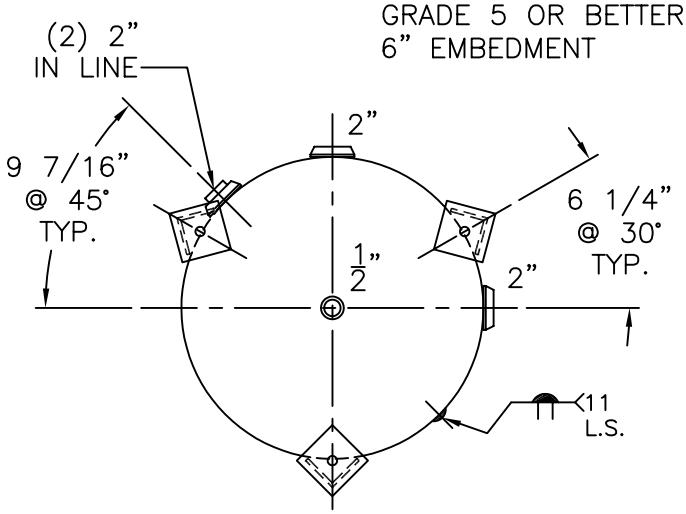

NOTE: 1) HYDRO @ 392 PSIG. MIN.

SHELL / HEADS			
			.200" SA-455 2:1 S.E.
			JOGGLE - .209" OFFSET
		.200" SA-455	
M.A.W.P. 300 PSIG. @ 400 °F			
M.D.M.T. -20 °F @ 300 PSIG.			
ASME. SECTION VIII DIV. 1, 2007 ADD 2007			
X-RAY: RT-4 SPOT L.S. ONLY			
GALLONS: 120	WT. 359 LBS.		
SERIAL NO.			
N.B.			

24-VD-120-L			REV. 9-26-08
FOR: HANSON STANDARD			DATE: 3-4-85
VERT. AIR TANK			
INSIDE: UNPAINTED			
OUTSIDE: PRIME			
LEG-ZONE 4-15 KM.			
BY: E.S.			SCALE: 3/4"=12"
ROY E. HANSON JR. MFG.			
1600 E. WASHINGTON BLVD.			
LOS ANGELES, CA 90021			