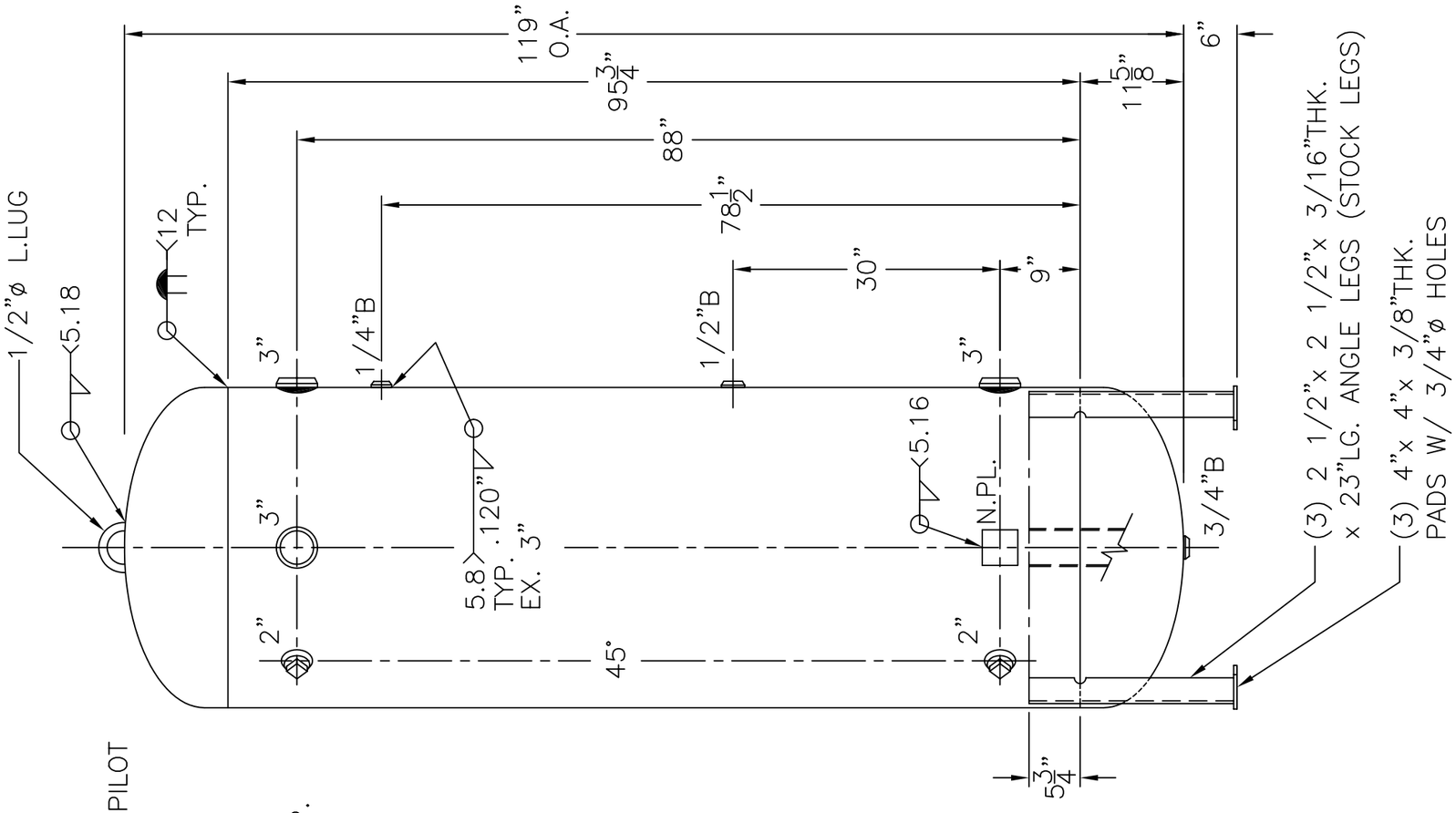

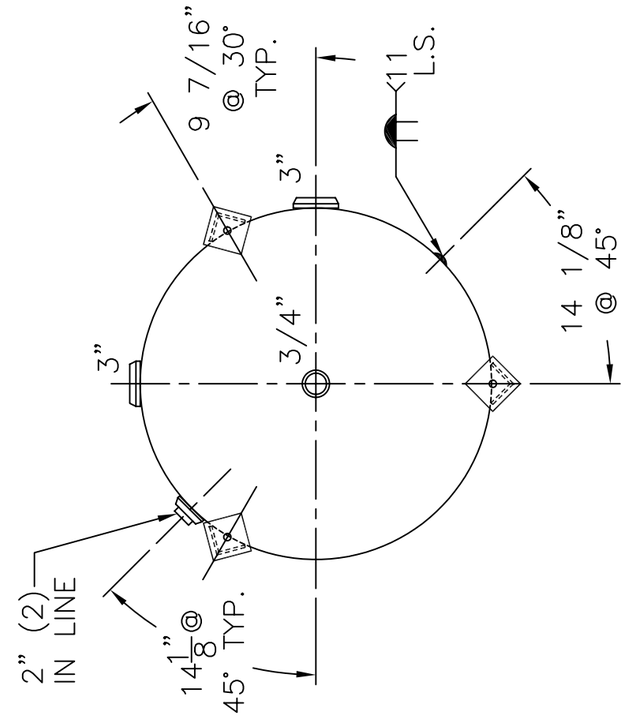

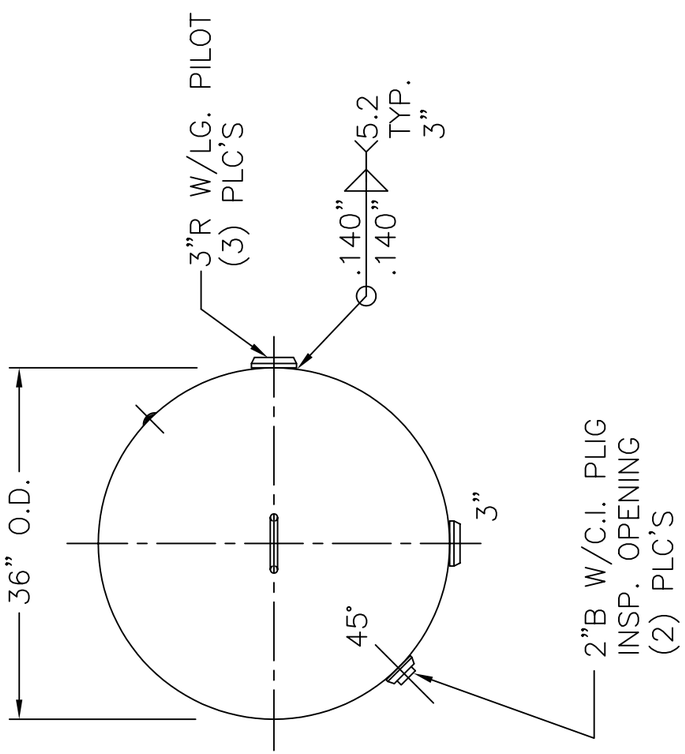

NOTE: 1) HYDRO @ 392 PSIG. MIN.

HEADS	.337" SA-455 2:1 S.E.	36-VD-500-L	REV. 9-26-05
	(.297" MIN.)		DATE: 1-2-87
		FOR: HANSON STANDARD	
		VERT. AIR TANK	
SHELL	.3125" SA-455		
	(.294" MIN.)		
		INSIDE: UNPAINTED	
M.A.W.P. 300 PSIG. @ 400 °F			
M.D.M.T. -20 °F @ 300 PSIG.		OUTSIDE: PRIME	
ASME. SECTION VIII DIV. 1, 2004 ADD 2004		CAD-"B" UNDER "STD"-SERIES	
X-RAY: RT-4 SPOT L.S. ONLY		BY: E.S.	SCALE:3/4"=12"
GALLONS: 500	WT. 1345 LBS.	ROY E. HANSON JR. MFG.	
SERIAL NO.		1924 COMPTON AVE. LOS ANGELES, CA 90011	
N.B.			