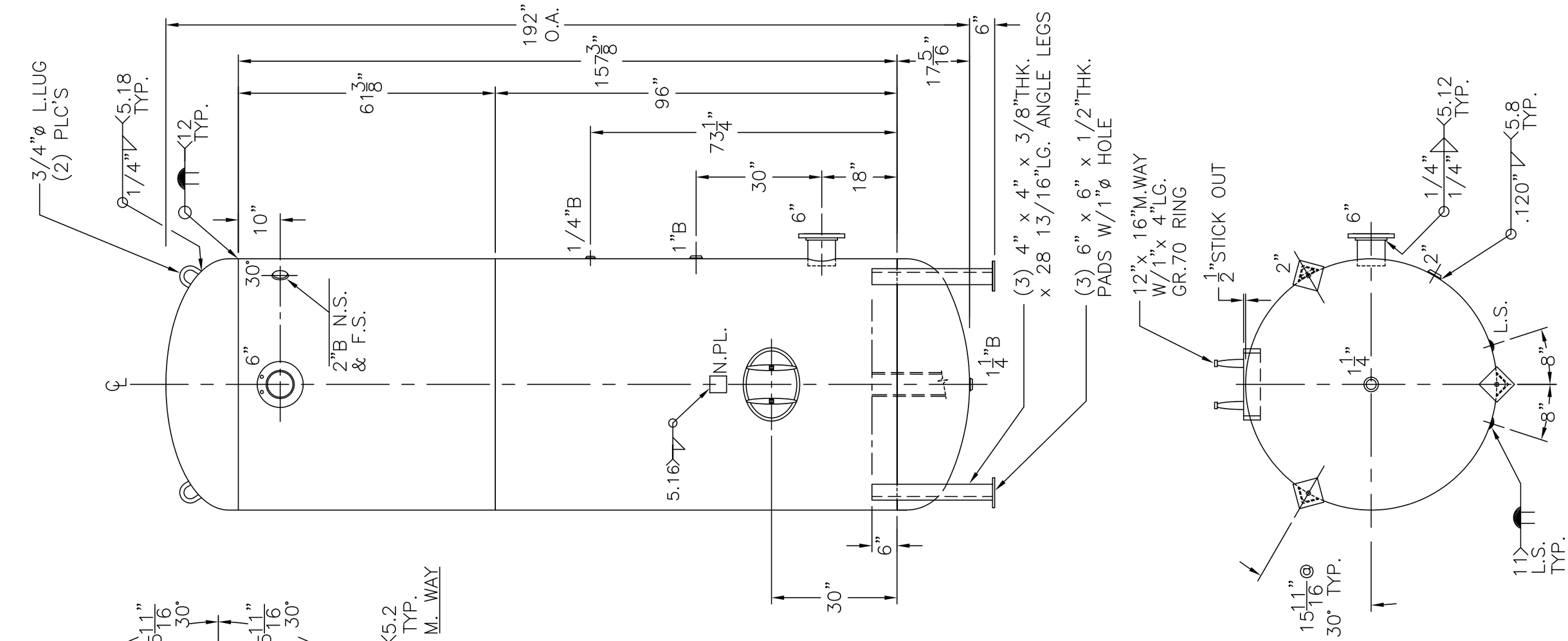

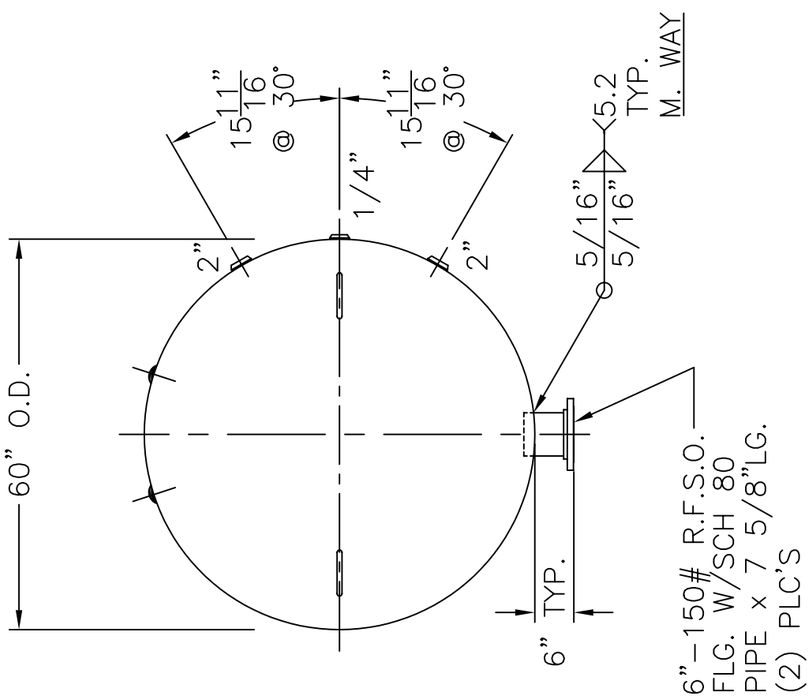

NOTE: 1) HYDRO @ 215 PSIG. MIN.

SHELL / HEADS	.270" SA-455 2:1 S.E. (.230"MIN.)	60-VM-2180-L — REV. 11-3-03 — DATE: 6-30-99
		FOR: HANSON STANDARD VERT. AIR TANK
	.288" SA-455	
		INSIDE: UNPAINTED
M.A.W.P. 165 PSIG. @ 400 °F		
M.D.M.T. -20 °F @ 165 PSIG.		OUTSIDE: PRIME
ASME. SECTION VIII DIV. 1, 2001 ADD 2002		CAD "B" SIZE UNDER "STD"-SERIES
X-RAY: RT-4 SPOT L.S. & HDS. G.S.		BY: E.S. — SCALE:1/2"=12"
GALLONS: 2180	WT. 3439 LBS.	ROY E. HANSON JR. MFG.
SERIAL NO.		1924 COMPTON AVE. LOS ANGELES, CA 90011
N.B.		