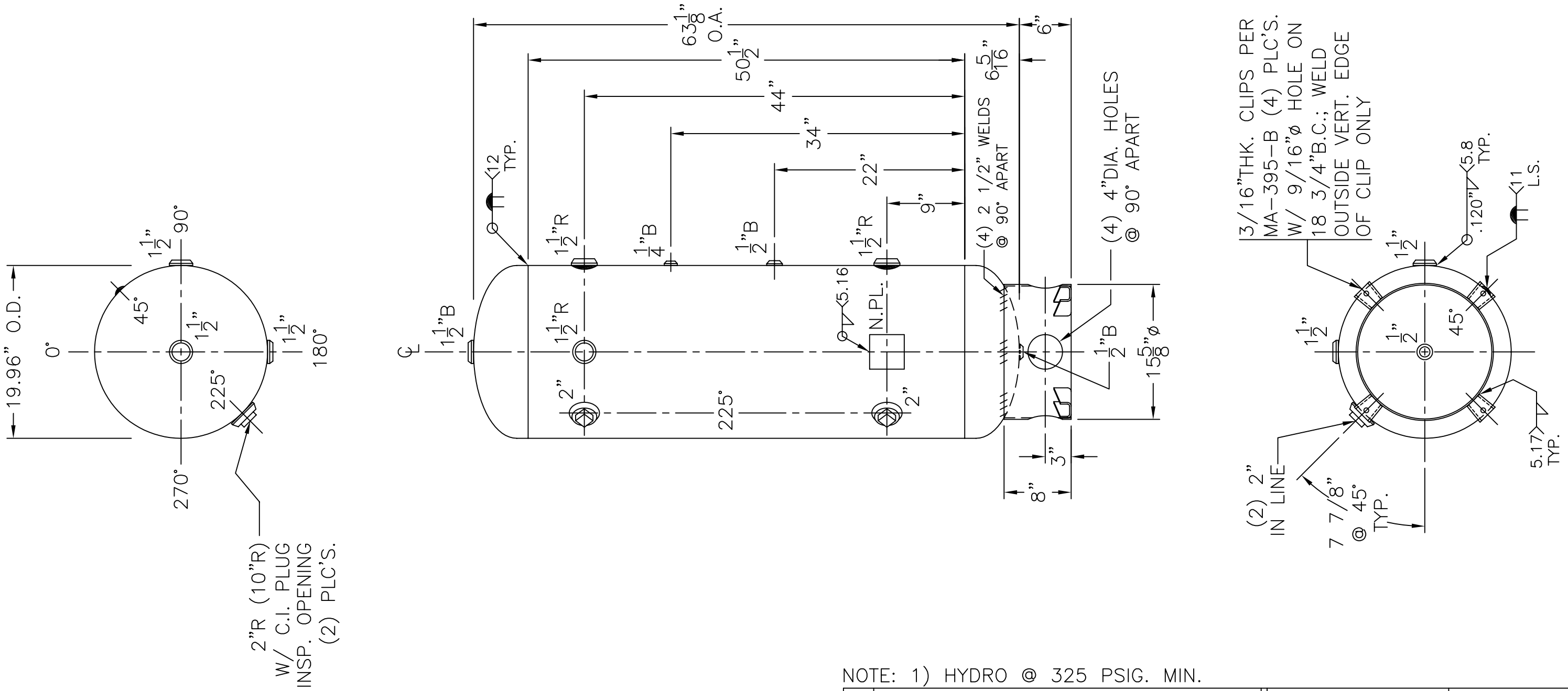

NOTE: 1) HYDRO @ 325 PSIG. MIN.

SHELL / HEADS	.136" SA-414-G 2:1 S.E.	20-VC-80-R — REV. 1-16-09 — DATE: 1-20-03
	JOGGLE – .149" OFFSET	FOR: HANSON STANDARD
		VERT. AIR TANK
	.166" SA-414-G	
		INSIDE: UNPAINTED
M.A.W.P. 250 PSIG. @ 400 °F		
M.D.M.T. –20 °F @ 250 PSIG.		OUTSIDE: PRIME
ASME. SECTION VIII DIV. 1, 2007 ADD 2008		CAD "B" SIZE UNDER "STD"-SERIES
X-RAY: RT-NO		BY: E.S. — SCALE: 1"=12"
GALLONS: 80	WT. 216 LBS.	ROY E. HANSON JR. MFG.
SERIAL NO.		1600 E. WASHINGTON BLVD.
N.B.		LOS ANGELES, CA 90021