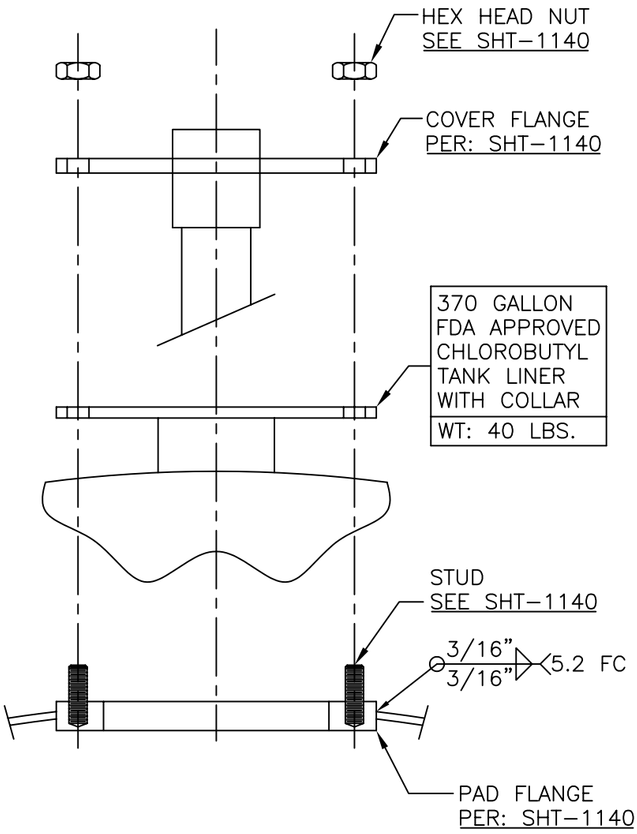

COVER ASSEMBLY DTL.

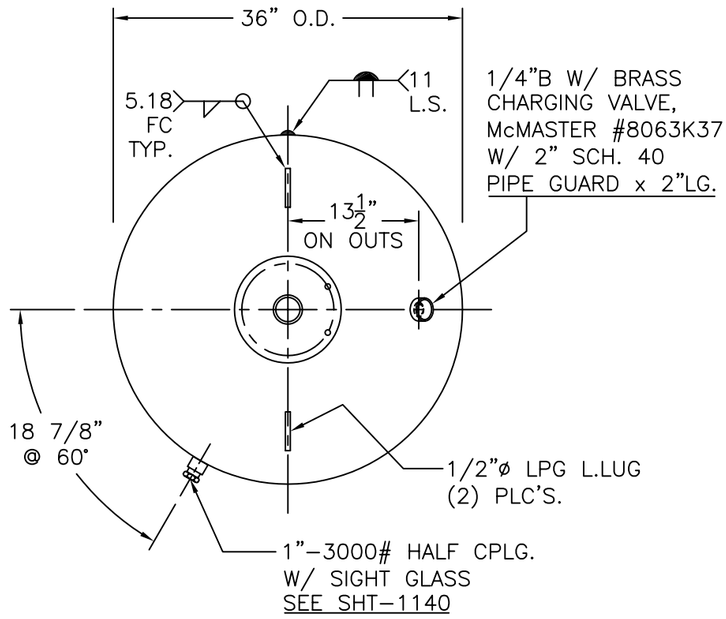

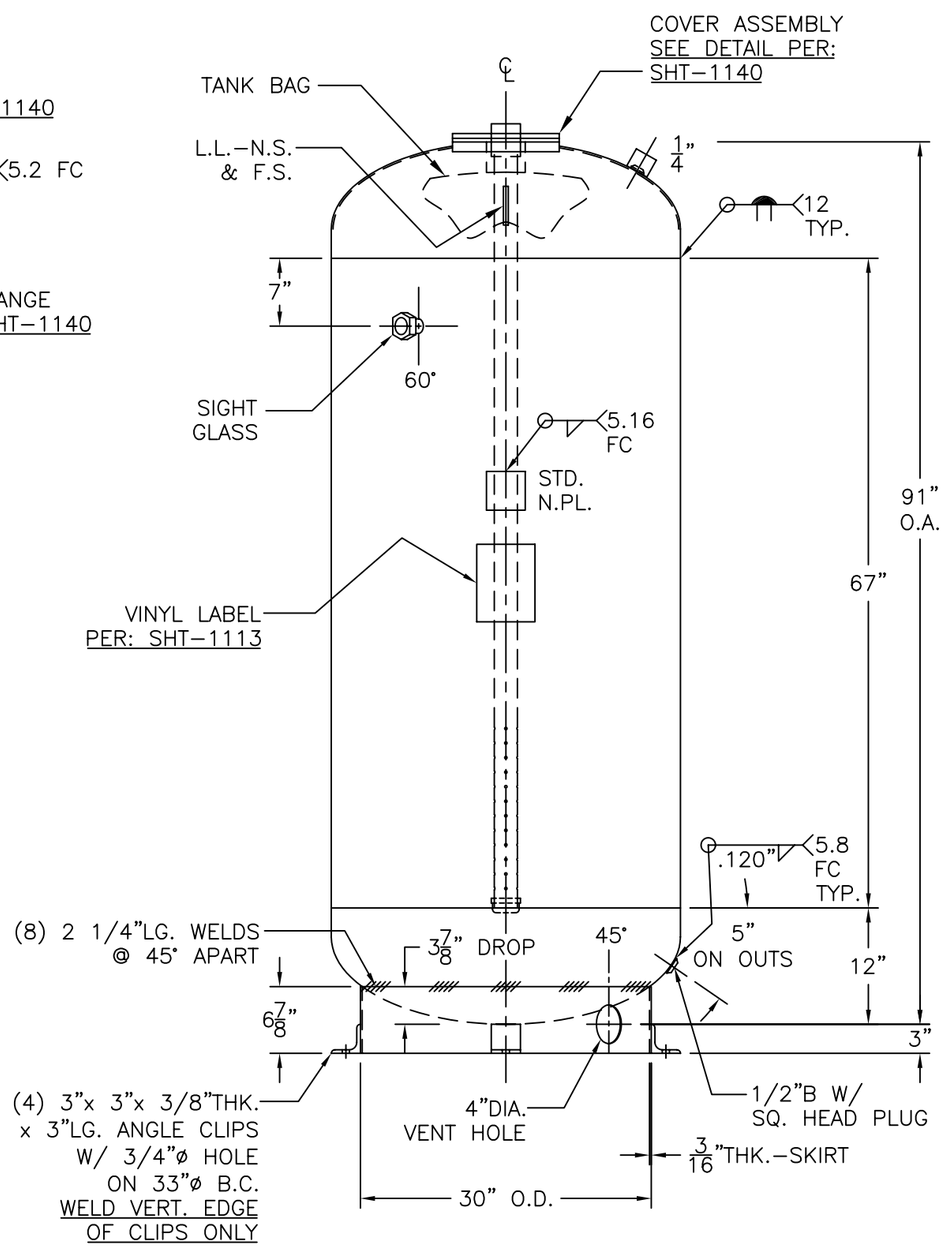

NOTE: 1) HYDRO @ 165 PSIG. MIN.
2) INSPECTION OPENING, UG 46(f)(6).

SHELL / HEADS	
JOGGLE	.182" SA-455 2:1 S.E.
	.164" SA-414-G
M.A.W.P.	125 PSIG. @ 240 °F
M.D.M.T.	32 °F @ 125 PSIG.
ASME. SECTION	VIII DIV. 1, 2004 ADD. 2004
X-RAY:	RT-NO
GALLONS:	370
WT.	704 LBS.
SERIAL NO.	
N.B.	

TB-370-R	REV.
HANSON STANDARD	DATE: 4-1-05
VERT. BLADDER TANK	
INSIDE: UNPAINTED	
OUTSIDE: PRIMER	
BY: E.S.	SCALE: 3/4"=12"

ROY E. HANSON JR. MFG.
1924 COMPTON AVE.
LOS ANGELES, CA 90011