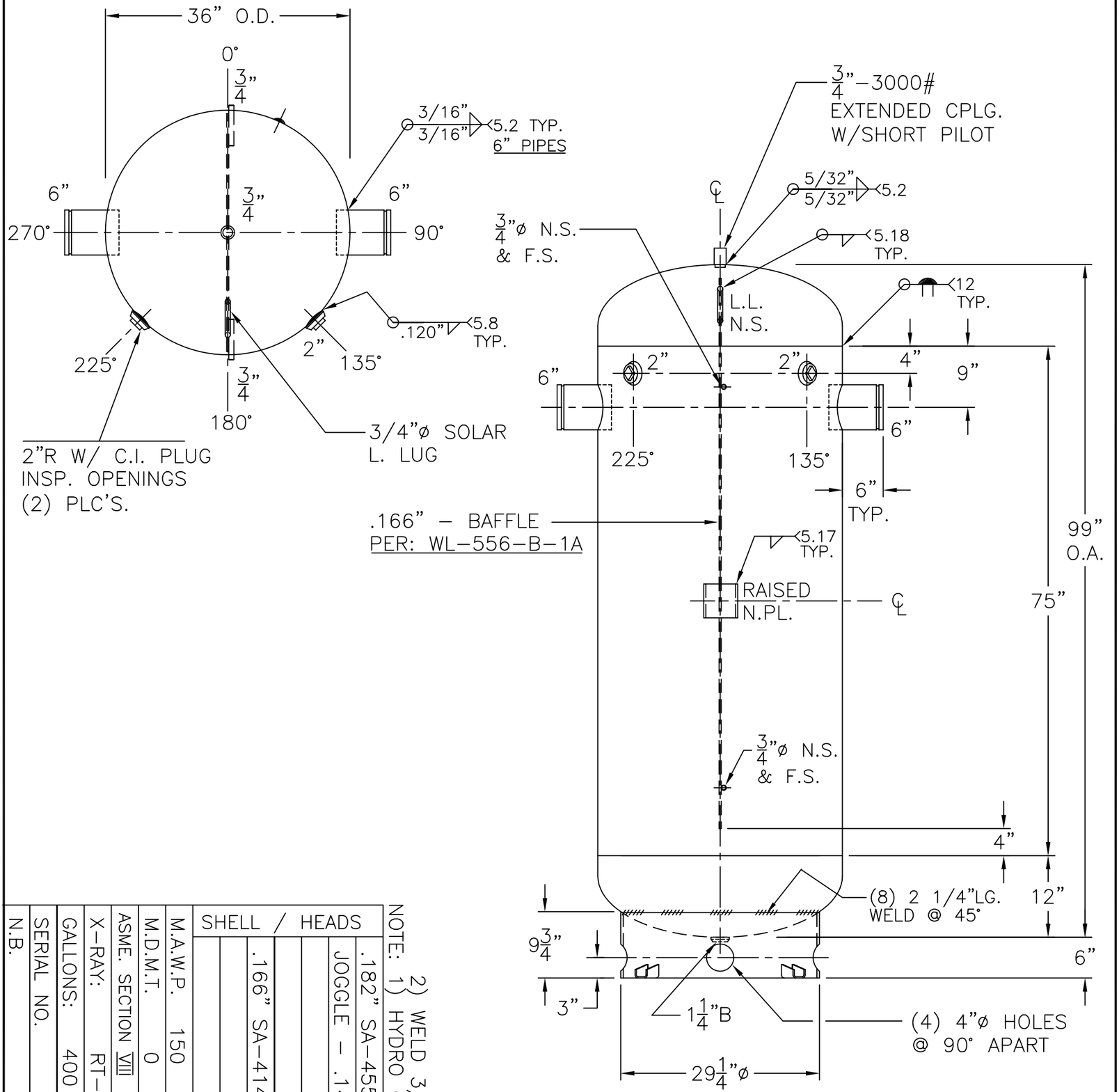

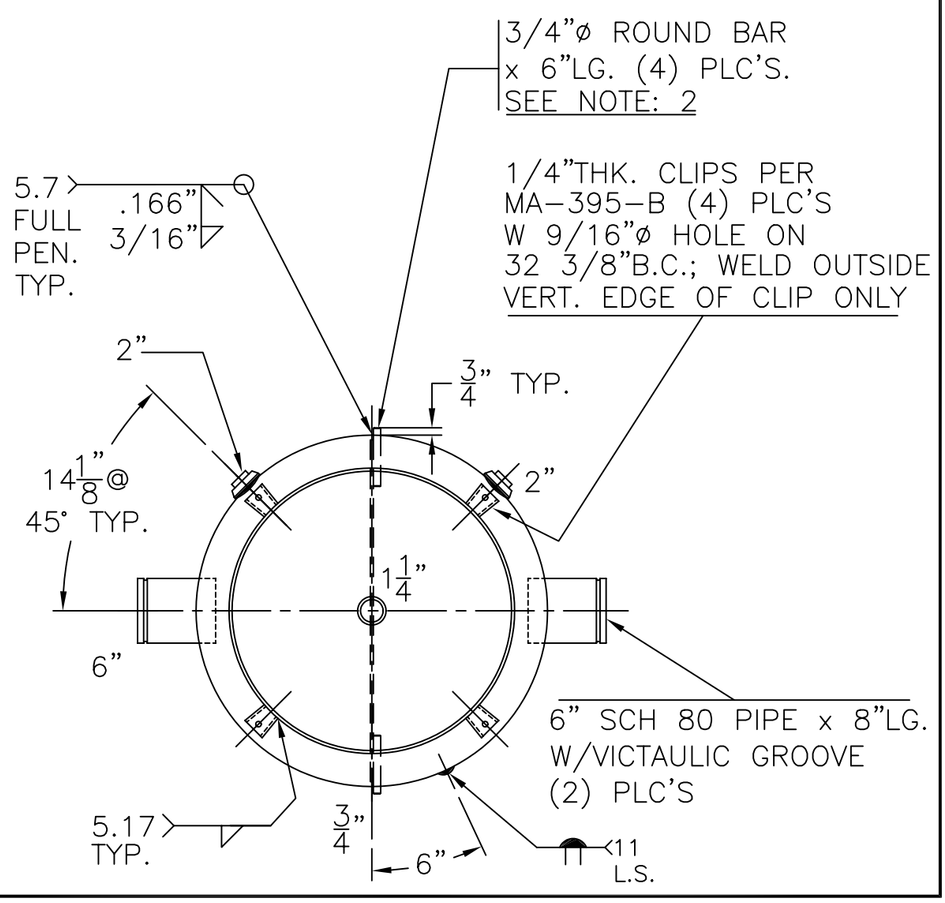

NOTE: 1) HYDRO @ 197 PSIG. MIN.
2) WELD 3/4"ø ROUND BARS TO SHELL AFTER HEADS ARE IN PLACE.

SHELL / HEADS	.182" SA-455 2:1 S.E.
	JOGGLE - .149 OFFSET
	.166" SA-414-G
M.A.W.P. 150 PSIG. @ 200 °F	
M.D.M.T. 0 °F @ 150 PSIG.	
ASME. SECTION VIII DIV. 1, 2004 ADD. 2006	
X-RAY: RT-4 SPOT L.S. ONLY	
GALLONS: 400	WT. 919 LBS.
SERIAL NO.	
N.B.	

WL-932-B	REV. 6-1-07
FOR: VERT. CHILLED WATER TANK	DATE: 5-24-07
OUTSIDE: SAND BLAST, INORGANIC ZINC PRIME	
INSIDE: UNPAINTED	
BY: J.G./STEVE	SCALE: 3/4"=12"

ROY E. HANSON JR. MFG.
1600 E. WASHINGTON BLVD.
LOS ANGELES, CA 90021