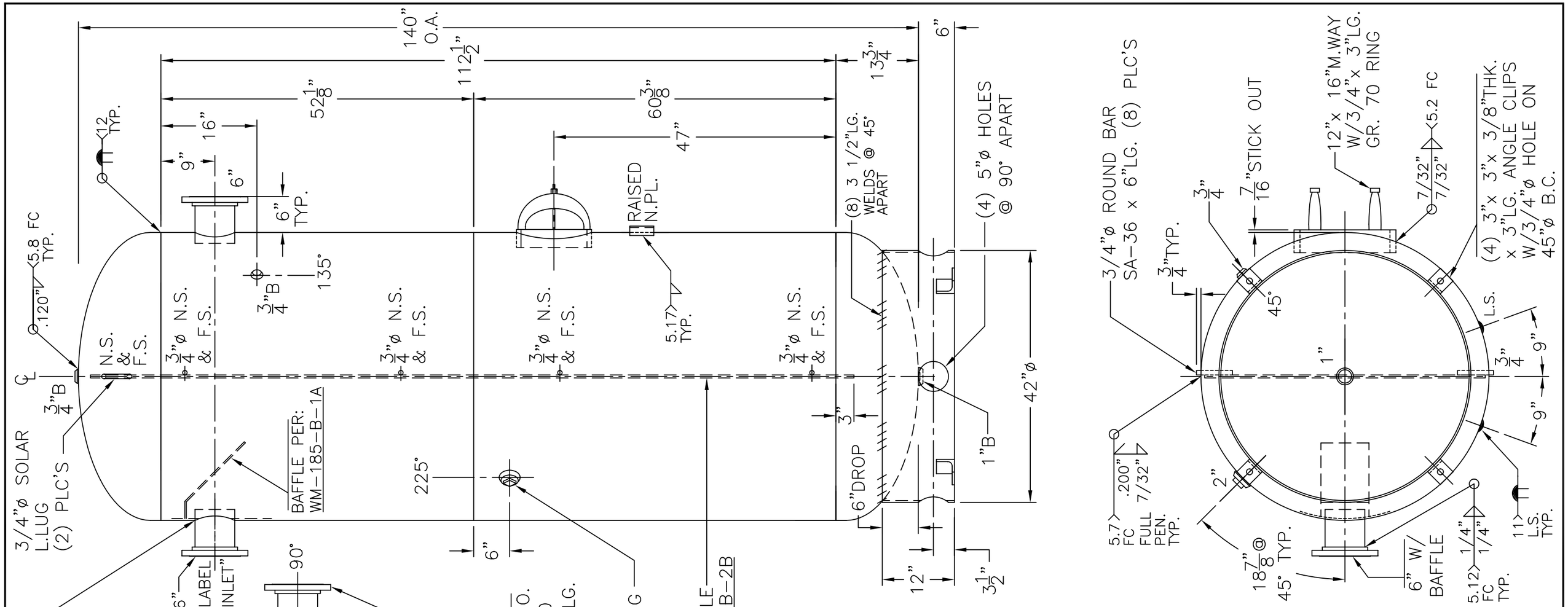

NOTE: 1) HYDRO @ 165 PSIG. MIN.
2) WELD 3/4"ø ROUND BARS TO SHELL AFTER HEADS ARE IN PLACE.

SHELL / HEADS	.200" SA-455 2:1 S.E.	WM-185-B	REV.
	JOGGLED - .208 OFFSET		DATE: 1-17-08
		FOR:	
		VERT. CHILLED WATER TANK.	
	.200" SA-455	SURFACE AREA = 156.2 SQ. FT.	
		INSIDE: UNPAINTED	
M.A.W.P.	125 PSIG. @ 200 °F		
M.D.M.T.	0 °F @ 125 PSIG.	OUTSIDE: PRIME	
ASME. SECTION VIII DIV. 1, 2007 ADD 2007			
X-RAY:	RT-4 SPOT L.S. ONLY	BY: J.G./B.C.	SCALE: 3/4"=12"
GALLONS:	1013 WT. 1940 LBS.	ROY E. HANSON JR. MFG.	
SERIAL NO.		1600 E. WASHINGTON BLVD. LOS ANGELES, CA 90021	
N.B.			