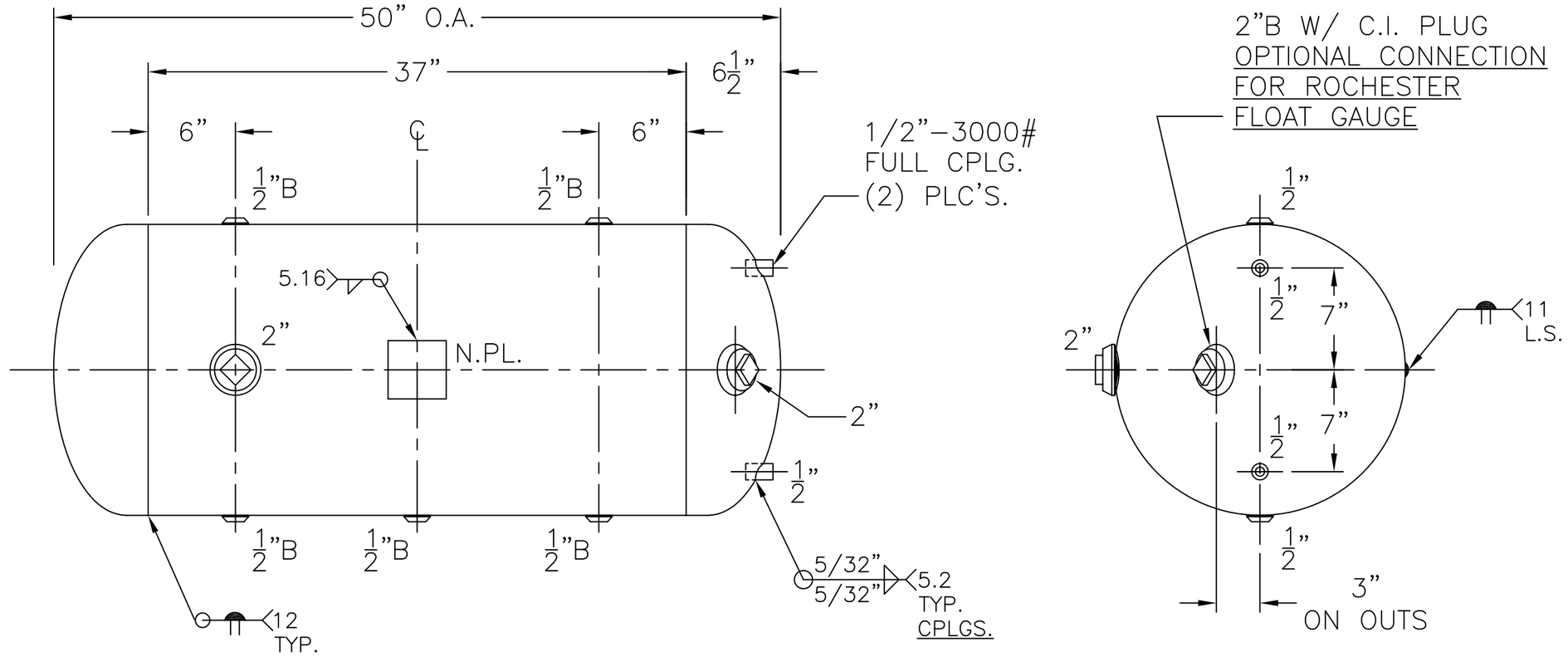

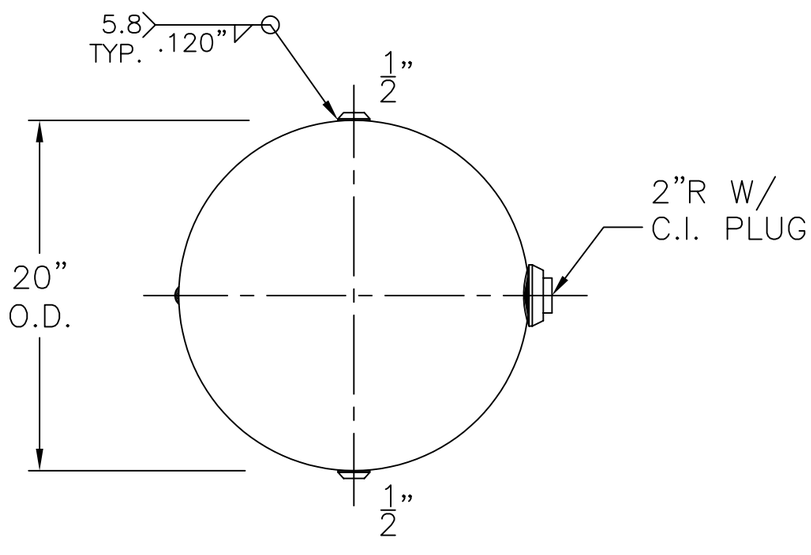

NOTE: 1) HYDRO @ 195 PSIG. MIN.

SHELL / HEADS	.135" SA-414-G 2:1 S.E.	X-60
	JOGGLE - .149 OFFSET	REV. 5-8-09
		DATE: 9-5-70
		FOR: HANSON STANDARD
		HORIZ. EXPANSION TANK
	.135" SA-414-G	
		INSIDE: UNPAINTED
		(GALVANIZING OPTIONAL)
M.A.W.P. 150 PSIG. @ 347 °F		
M.D.M.T. -20 °F @ 150 PSIG.		OUTSIDE: PRIME
ASME. SECTION VIII DIV. 1, 2007 ADD 2008		
X-RAY: RT-NO		BY: J.G. / SCALE: 1"-12"
GALLONS: 60	WT. 130 LBS.	ROY E. HANSON JR. MFG.
SERIAL NO.		1600 E. WASHINGTON BLVD.
N.B.		LOS ANGELES, CA 90021