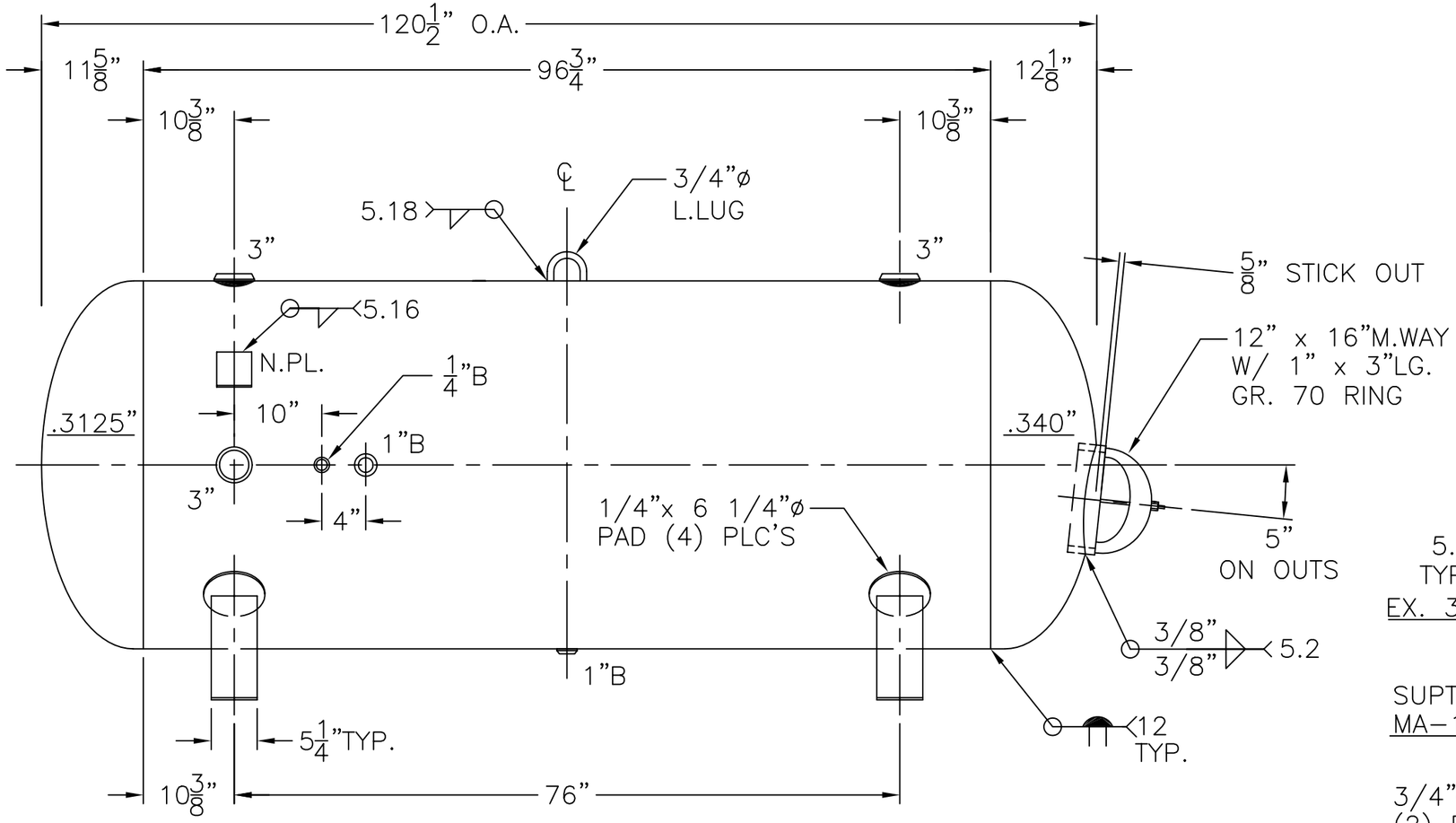

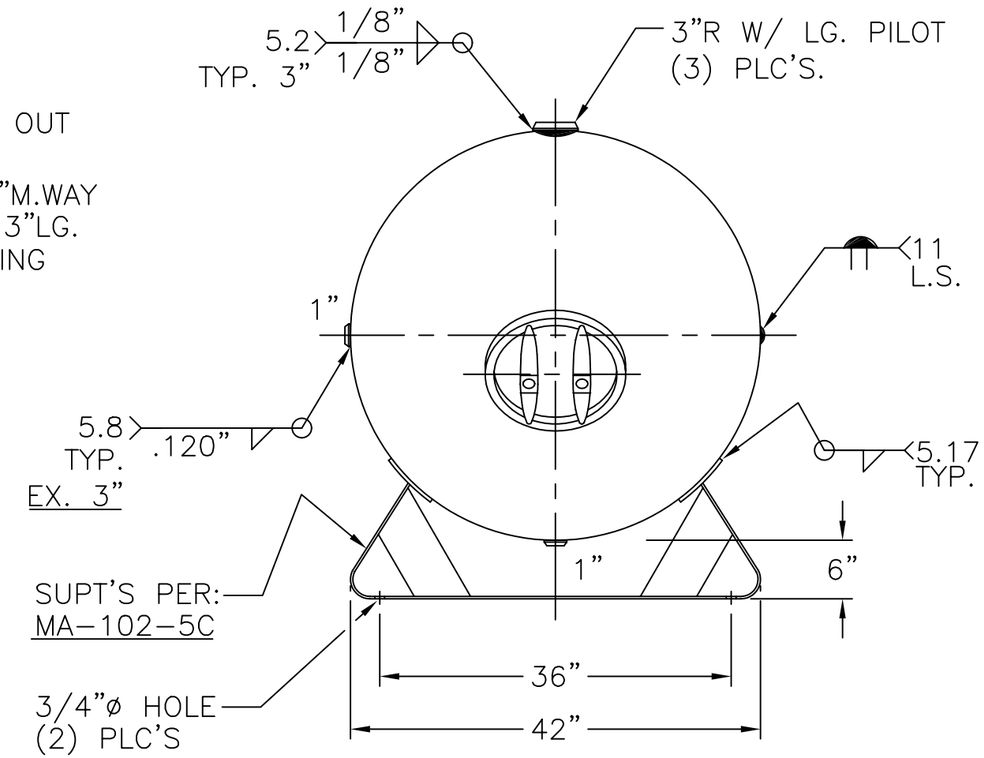

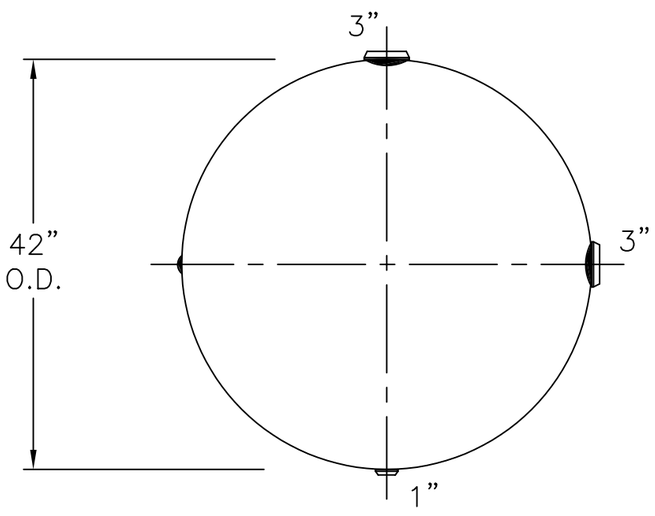

VIEW W/OUT SUPT'S

NOTES: 1) HYDRO @ 399 PSIG. MIN.
2) WELDS TO, OR JOINING SA-612 HAVE W.P.S. W/ SUFFIX "B".

SHELL/ HEADS	LEFT-.3125" SA-455 2:1 S.E.	
	(.291" MIN.)-TRIM	
	RIGHT-.340" SA-612 2:1 S.E.	
	(.335" MIN.)-TRIM	
	.375" SA-455	
M.A.W.P.	300 PSIG. @ 400 °F	
M.D.M.T.	-20 °F @ 300 PSIG.	
ASME. SECTION VIII DIV. 1, 2001 ADD. 2002		
X-RAY: RT-4 SPOT L.S. & LEFT G.S.		
GALLONS: 660	WT. 1951 LBS.	
SERIAL NO.		
N.B.		

42-HD-660-W	REV. 11-26-02
	DATE: 10-21-94
FOR: HANSON STANDARD	
HORIZ. AIR TANK	
INSIDE: UNPAINTED	
OUTSIDE: PRIME	
CAD-"B" UNDER "STD"-SERIES	
BY: E.S.	SCALE: 3/4"=12"

ROY E. HANSON JR. MFG.
1924 COMPTON AVE.
LOS ANGELES, CA 90011