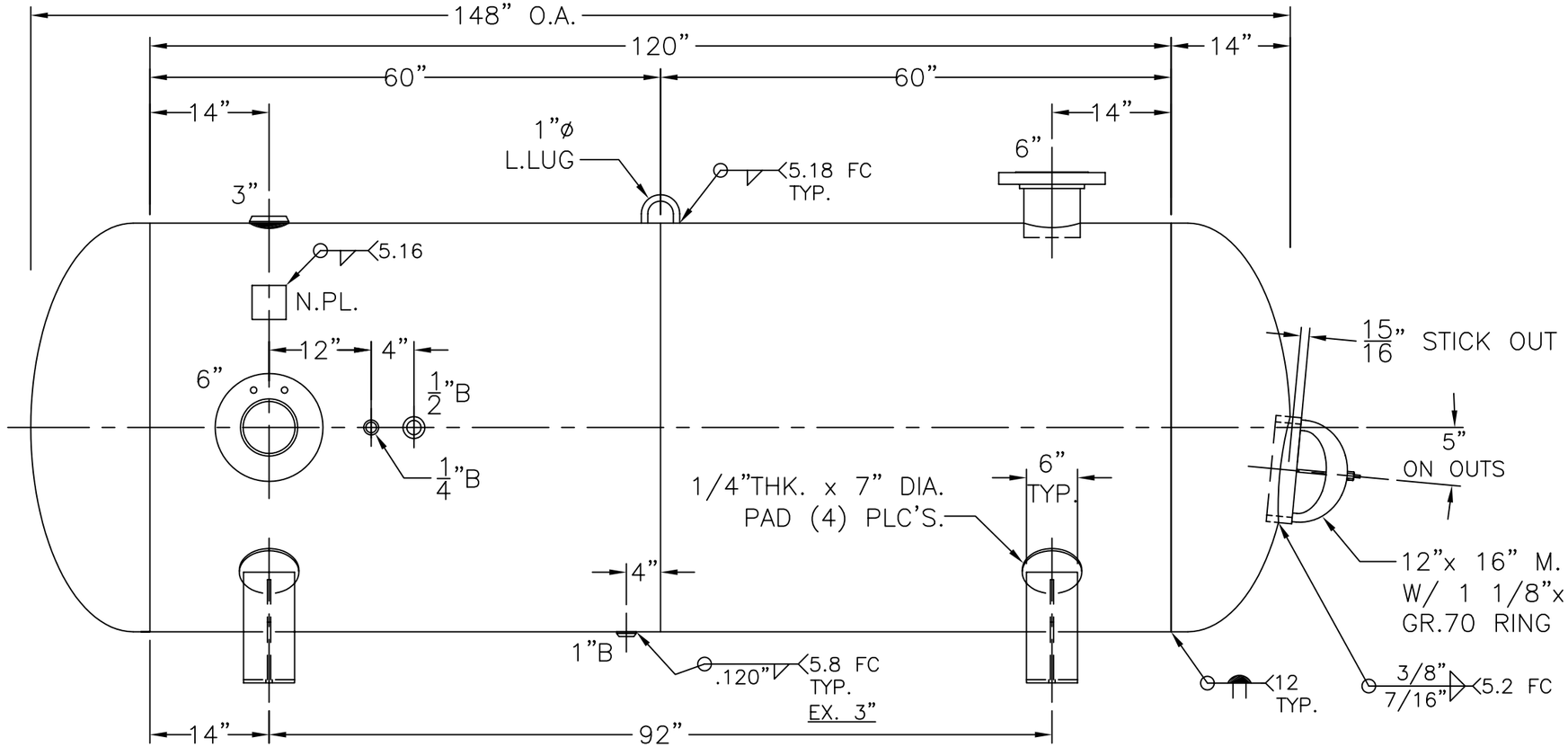

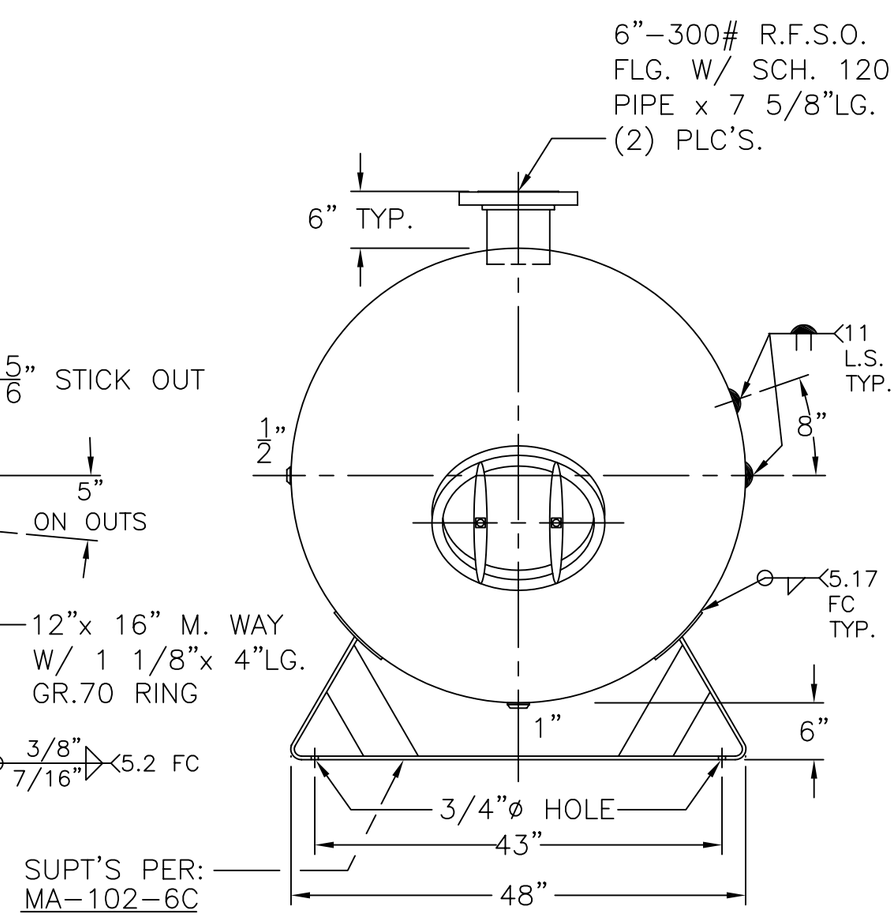

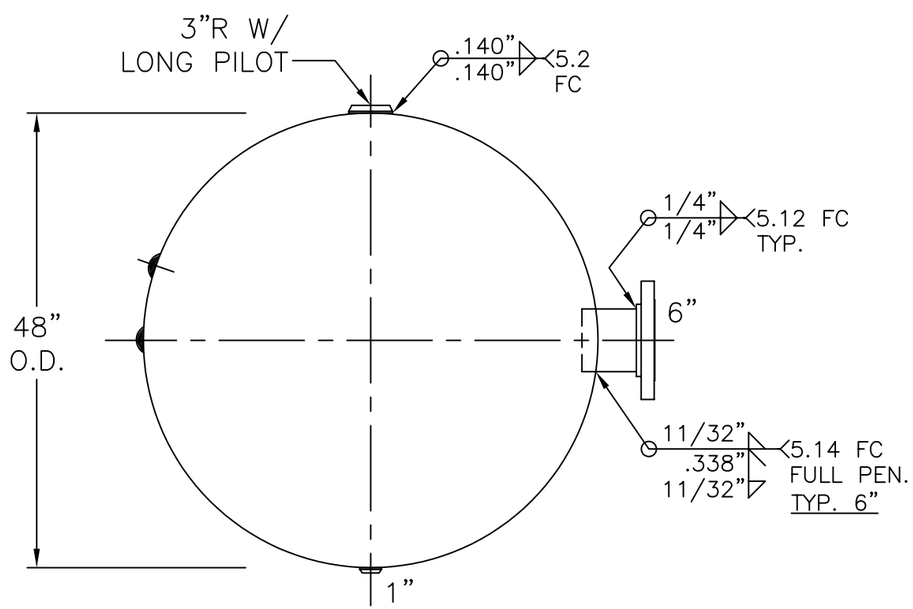

VIEW W/O SUPPORTS

NOTE: 1) HYDRO TEST @ 393 PSIG. MIN.

SHELL/HEADS	.375" SA-516-70 2:1 S.E.	48-HD-1060-W — REV. 6-23-08 — DATE: 3-1-91
	RIGHT - .374" MIN.	FOR: HANSON STANDARD
	LEFT - .358" MIN.	HORIZ. AIR TANK
	.338" SA-455	
		INSIDE: UNPAINTED
M.A.W.P. 300 PSIG. @ 400 °F		
M.D.M.T. -20 °F @ 300 PSIG.		OUTSIDE: PRIME
ASME. SECTION VIII DIV. 1, 2007 ADD 2007		CAD-"B" UNDER "STD"-SERIES
X-RAY: RT-2 100% L.S. SPOT ALL G.S.		BY: E.S. — SCALE: 3/4"=12"
GALLONS: 1060	WT. 2849 LBS.	ROY E. HANSON JR. MFG.
SERIAL NO.		1600 E. WASHINGTON BLVD.
N.B.		LOS ANGELES, CA 90021