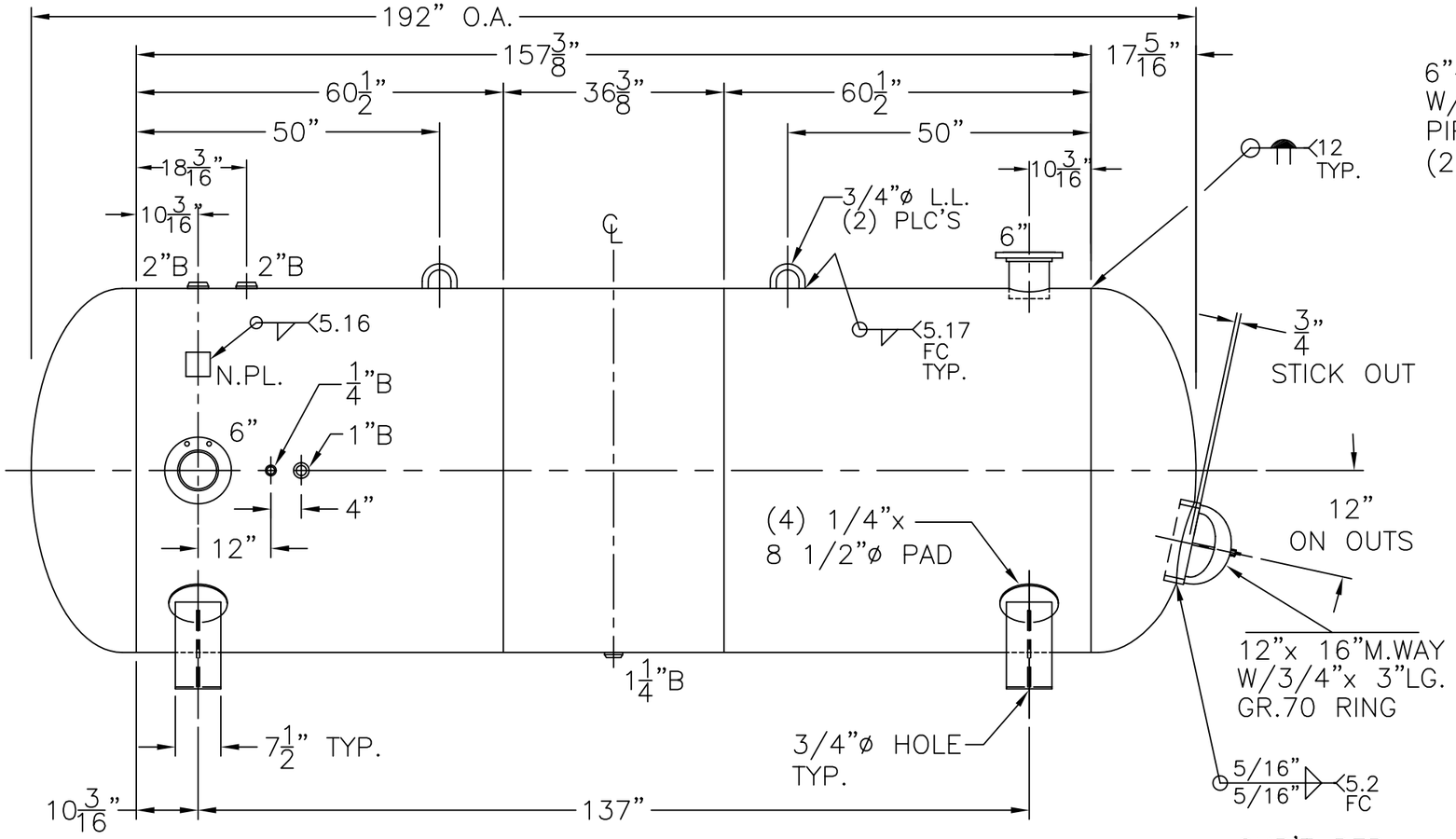

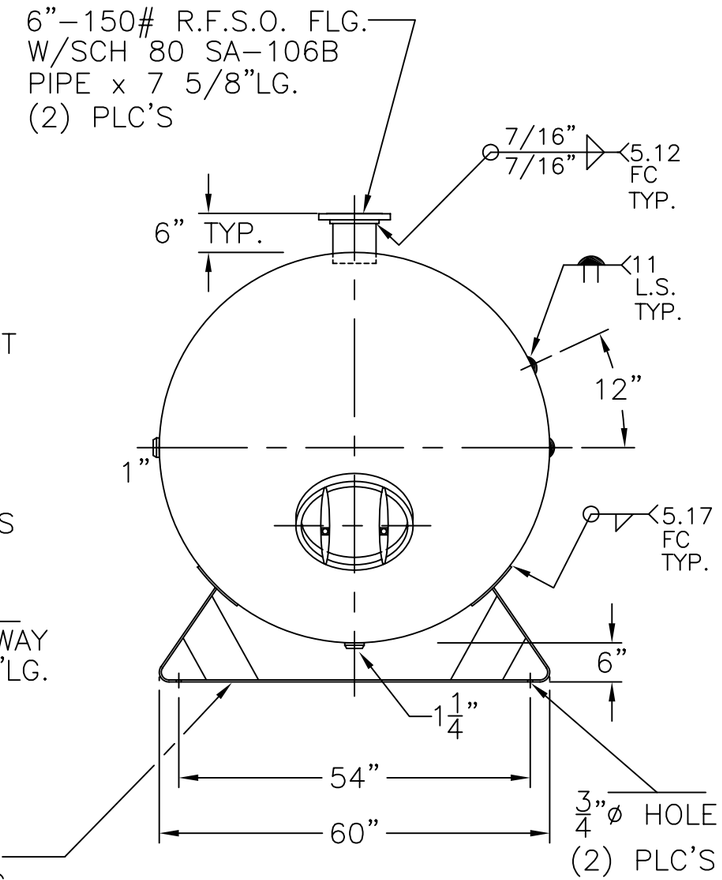

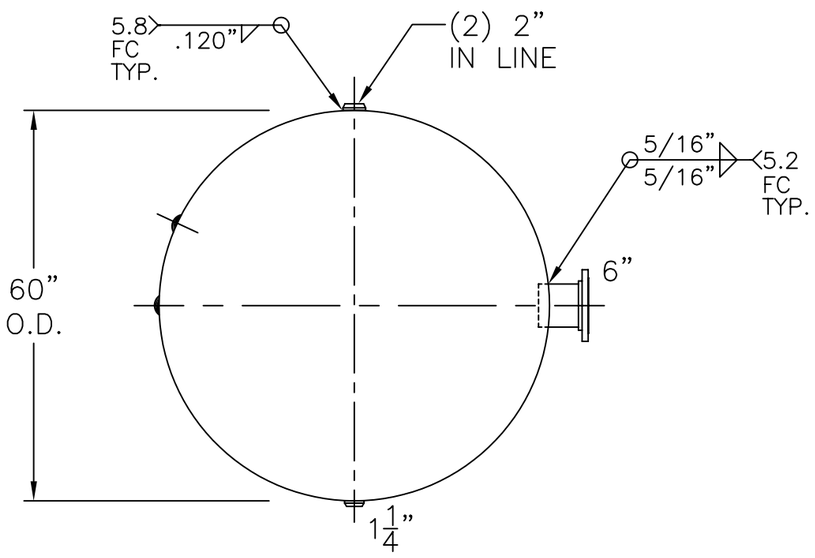

END VIEW W/OUT SUPT'S

NOTE: 1) HYDRO @ 218 PSIG. MIN.

SHELL / HEADS	LEFT-.3125" SA-516-70 2:1 S.E.	60-HM-2180-W	REV. 10-16-08
	(.293"MIN.)		DATE: 8-7-81
	RIGHT-.3125" SA-516-70 2:1 S.E.	FOR: HANSON STANDARD	
	(.3125" MIN.)	HORIZ. AIR TANK	
	.289" SA-455		
		UW-21 (b)	
		INSIDE: UNPAINTED	
M.A.W.P.	165 PSIG. @ 400 °F		
M.D.M.T.	-20 °F @ 165 PSIG.	OUTSIDE: PRIME	
ASME. SECTION VIII	DIV. 1, 2007 ADD 2007	CAD-"B" SIZE UNDER "STD"-SERIES	
X-RAY:	RT-4 SPOT L.S. ONLY	BY: J.G.	SCALE: 1/2"=12"
GALLONS:	2180 WT. 3738 LBS.	ROY E. HANSON JR. MFG.	
SERIAL NO.		1600 E. WASHINGTON BLVD. LOS ANGELES, CA 90021	
N.B.			