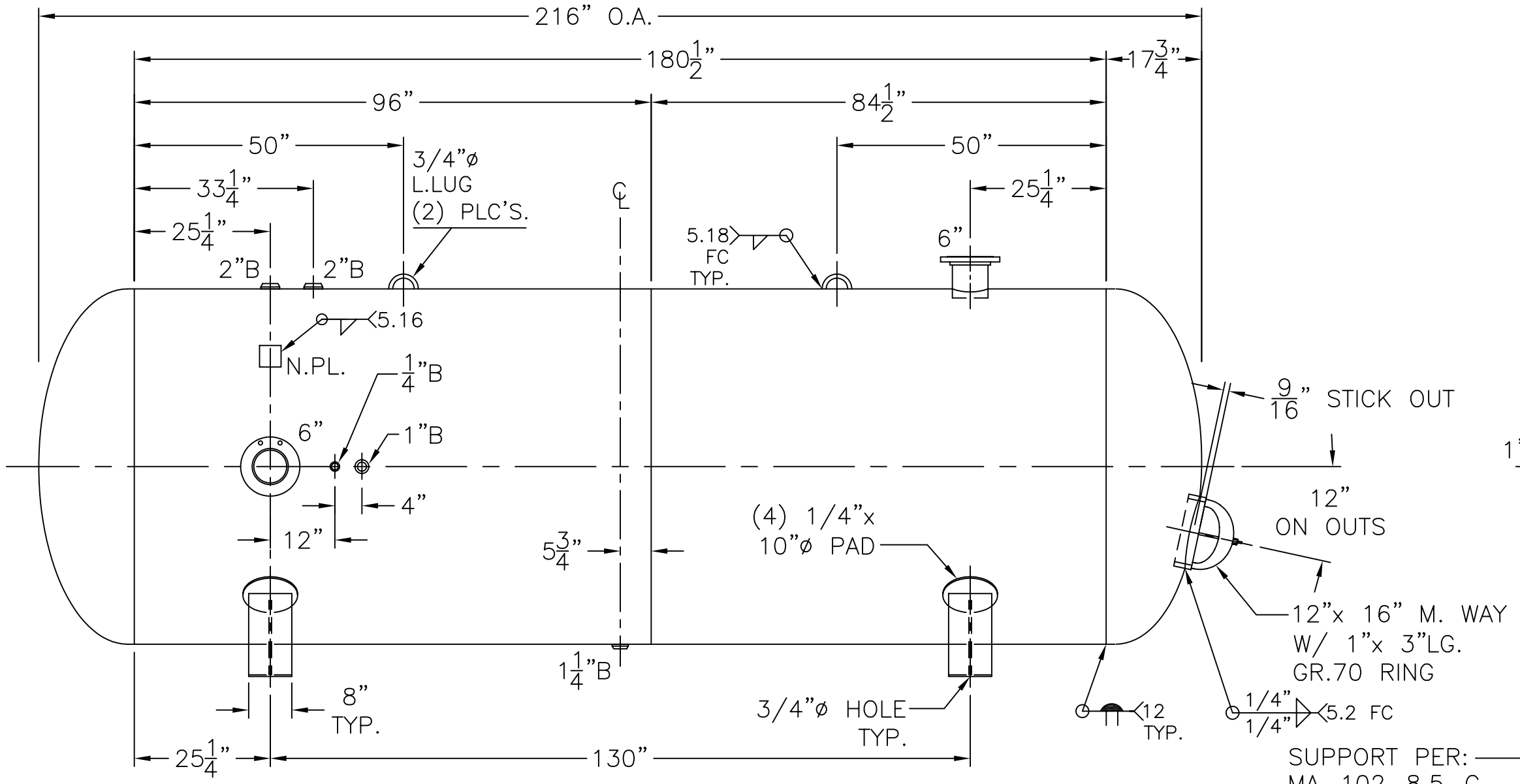

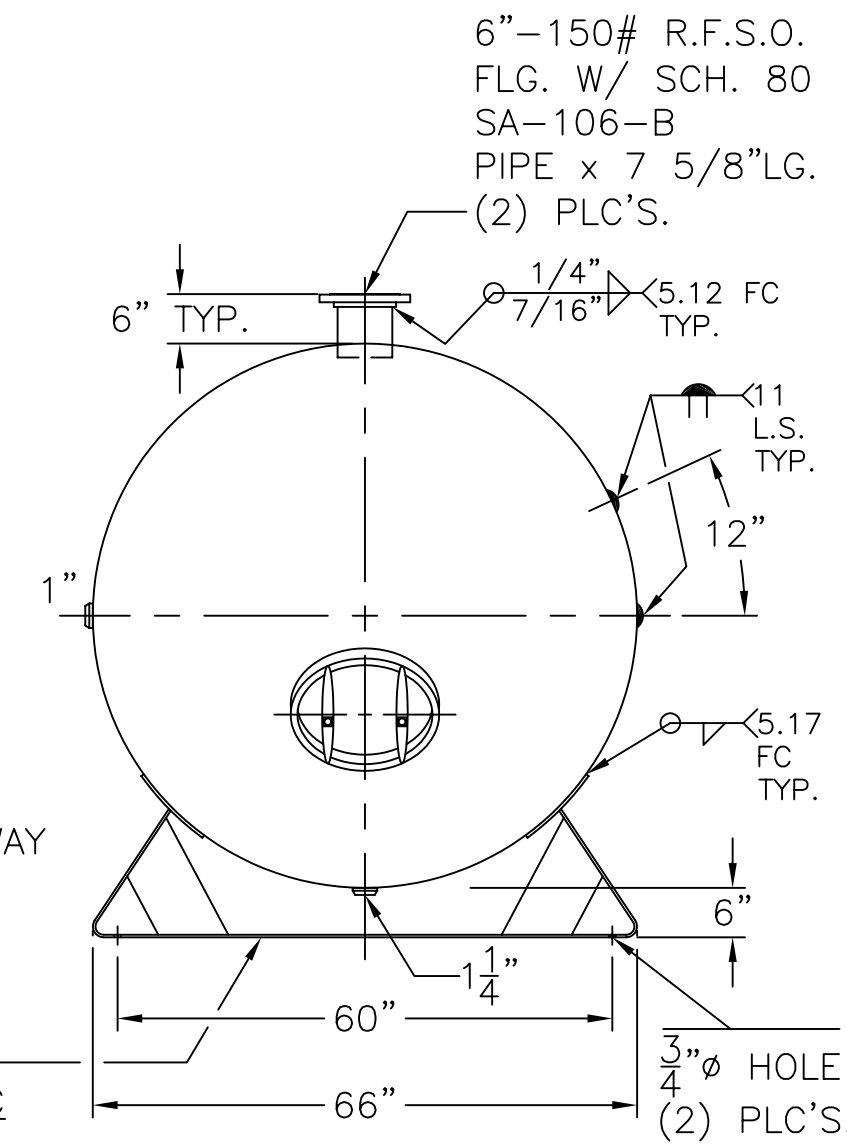

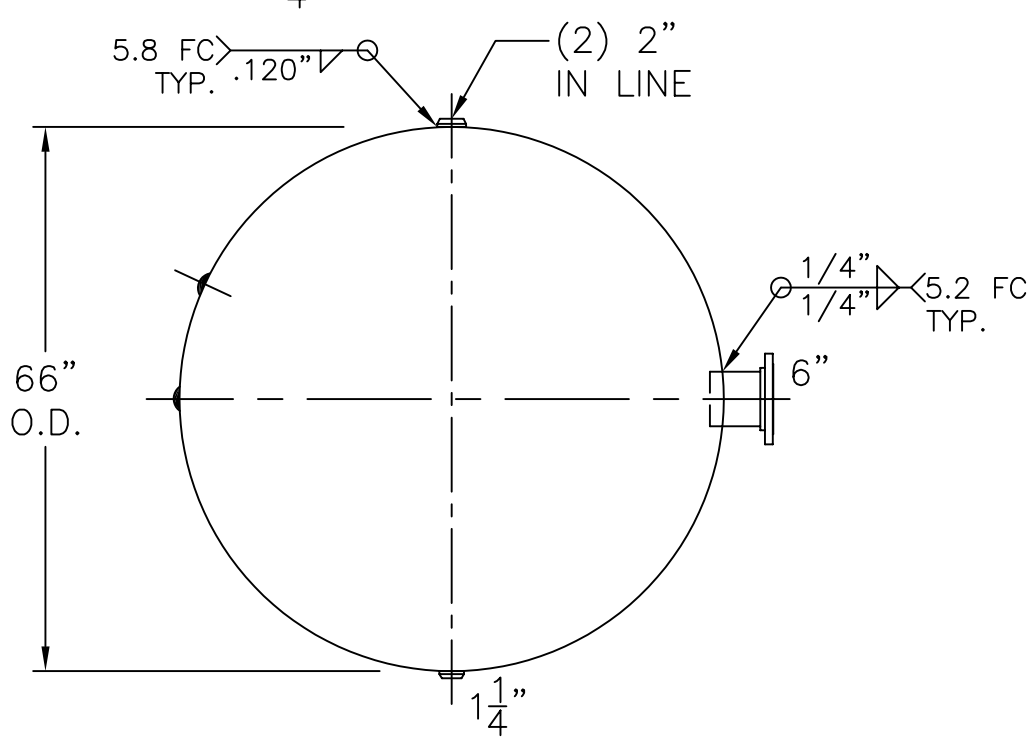

VIEW W/O SUPPORTS

NOTE: 1) HYDRO @ 163 PSIG. MIN.

SHELL / HEADS	.250" SA-455 2:1 S.E.	66-HG-3000-W — REV. 10-31-12
	(.196" MIN.) - LEFT	DATE: 4-15-02
	(.221" MIN.) - RIGHT	FOR: HANSON STANDARD
		HORIZ. AIR TANK
	.248" SA-455	UW-21(b)
		INSIDE: UNPAINTED
M.A.W.P. 125 PSIG. @ 400 °F		
M.D.M.T. -20 °F @ 125 PSIG.		OUTSIDE: PRIME
ASME. SECTION VIII DIV. 1, 2010 ADD. 2010		CAD-"B" UNDER "STD"-SERIES
X-RAY: RT-4 SPOT L.S. & SPOT HDS. G.S.		BY: E.S. — SCALE:1/2"=12"
GALLONS: 3000	WT. 3900 LBS.	ROY E. HANSON JR. MFG.
SERIAL NO.		1600 E. WASHINGTON BLVD.
N.B.		LOS ANGELES, CA 90021