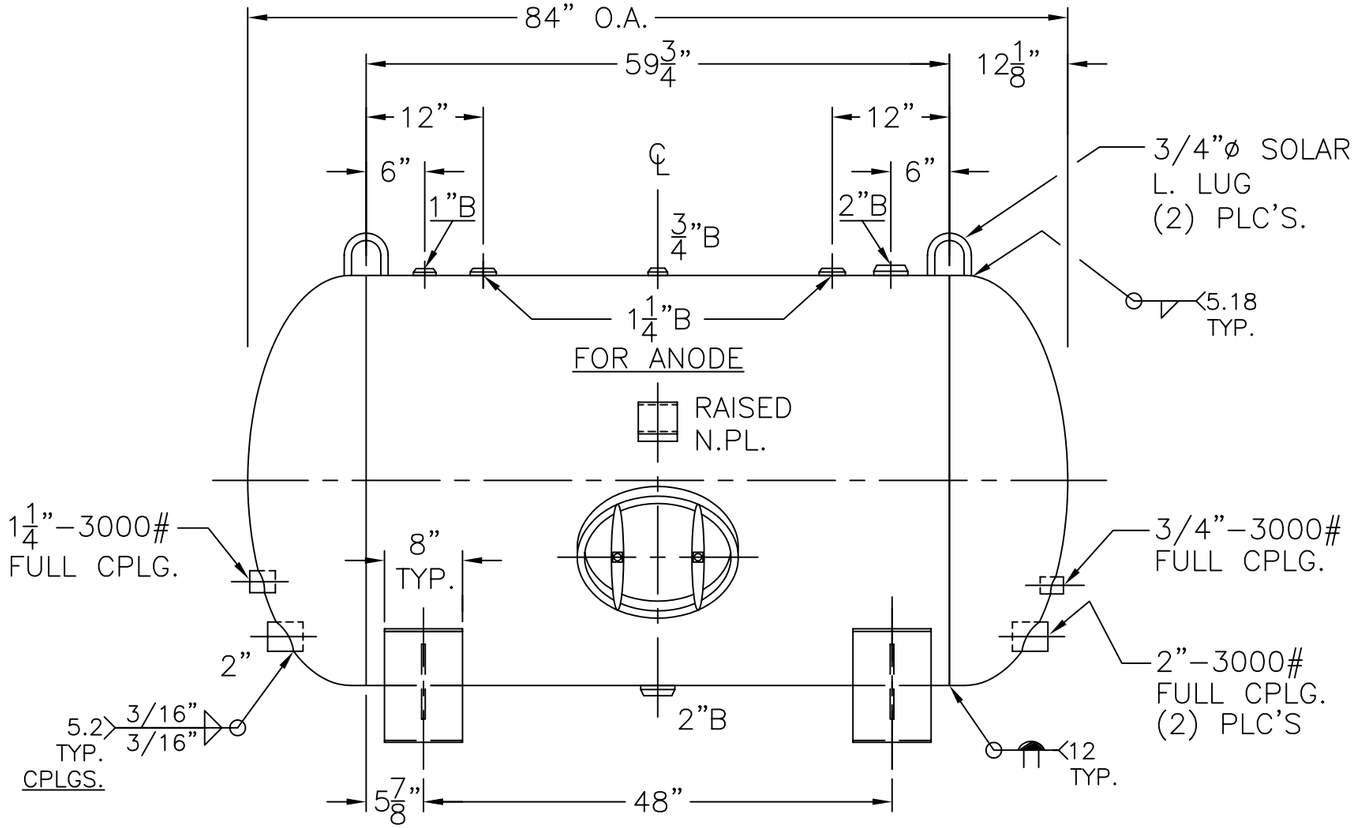

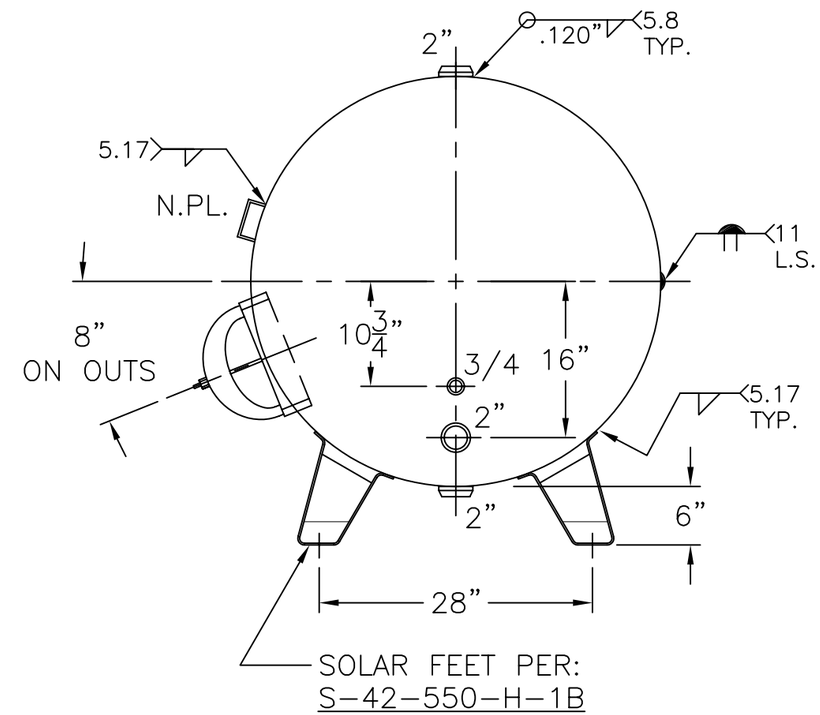

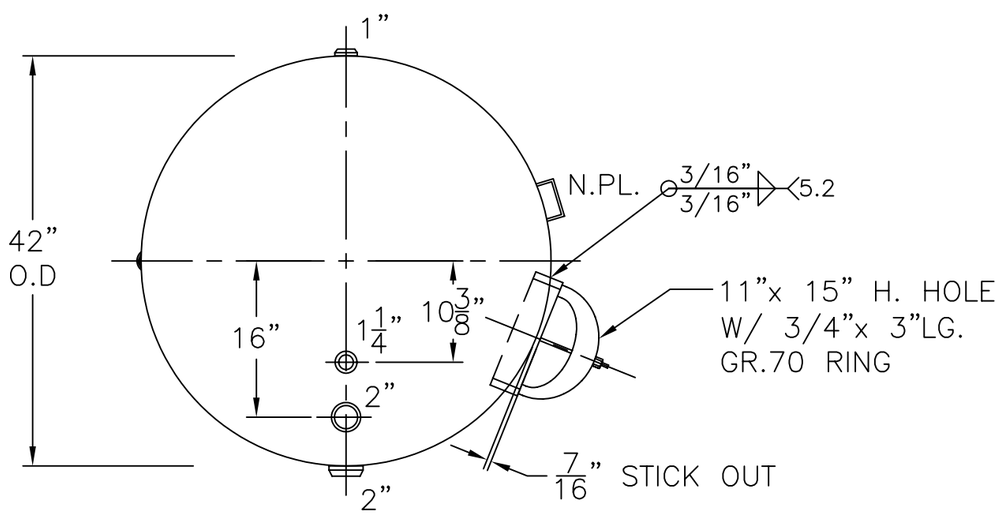

VIEW W/O SUPPORTS

3) 4-1-04 PROOF TEST.
2) SHIP LOOSE W/ (2) 1 5/16"x 30"LG. RIGID MAG. ANODES.
NOTE: 1) HYDRO @ 240 PSIG. MIN.

SHELL / HEADS	.205" SA-455 2:1 S.E.	GS-42-462-H	REV.
	JOGGLE		DATE: 7-25-08
		FOR: HANSON STANDARD	
	.175" SA-414-G	HORIZ. HOT WATER TANK	
		SURFACE AREA = 84.3 SQ. FT.	
M.A.W.P. 160 PSIG. @ 210 °F		INSIDE: GLASS LINED	
		OUTSIDE: PRIME	
ASME. SECTION IV 2007 ADD 2007		CAD "B" SIZE UNDER "STD"-SERIES	
X-RAY: RT-NO / H.L.W.		BY: E.S.	SCALE: 3/4"=12"
GALLONS: 462	WT. 811 LBS.	ROY E. HANSON JR. MFG.	
SERIAL NO.		1600 E. WASHINGTON BLVD.	
N.B.		LOS ANGELES, CA 90021	