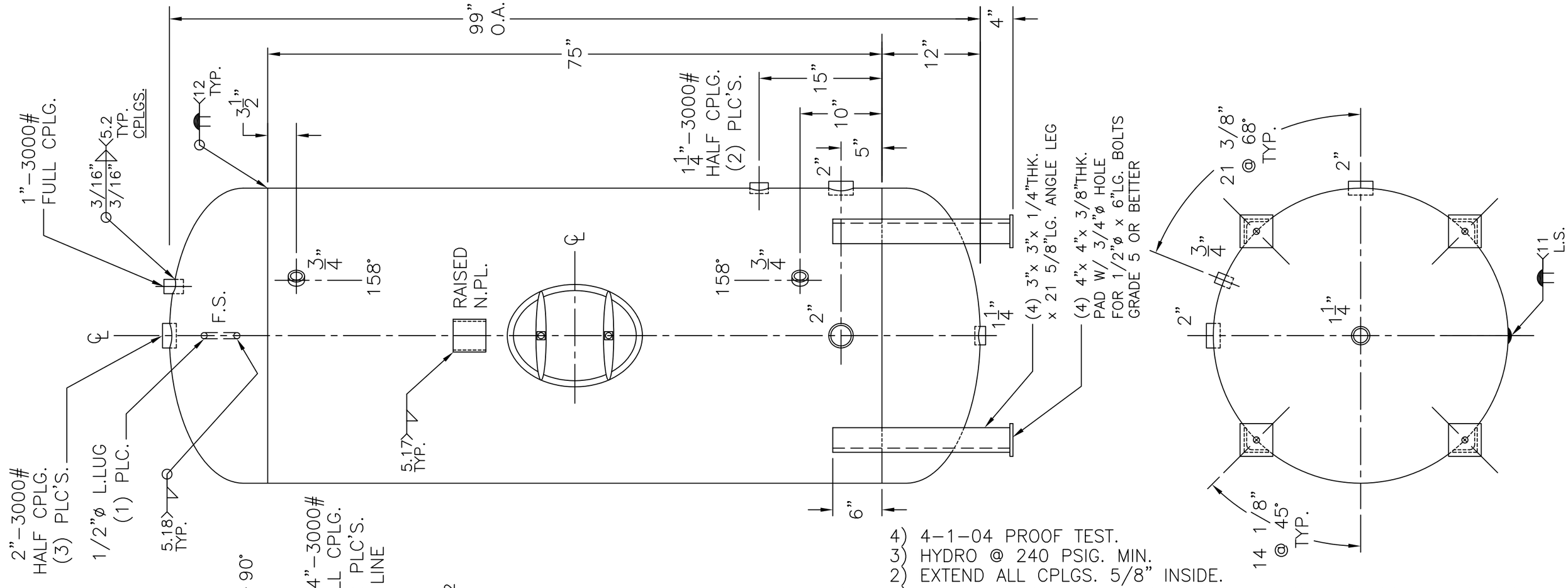

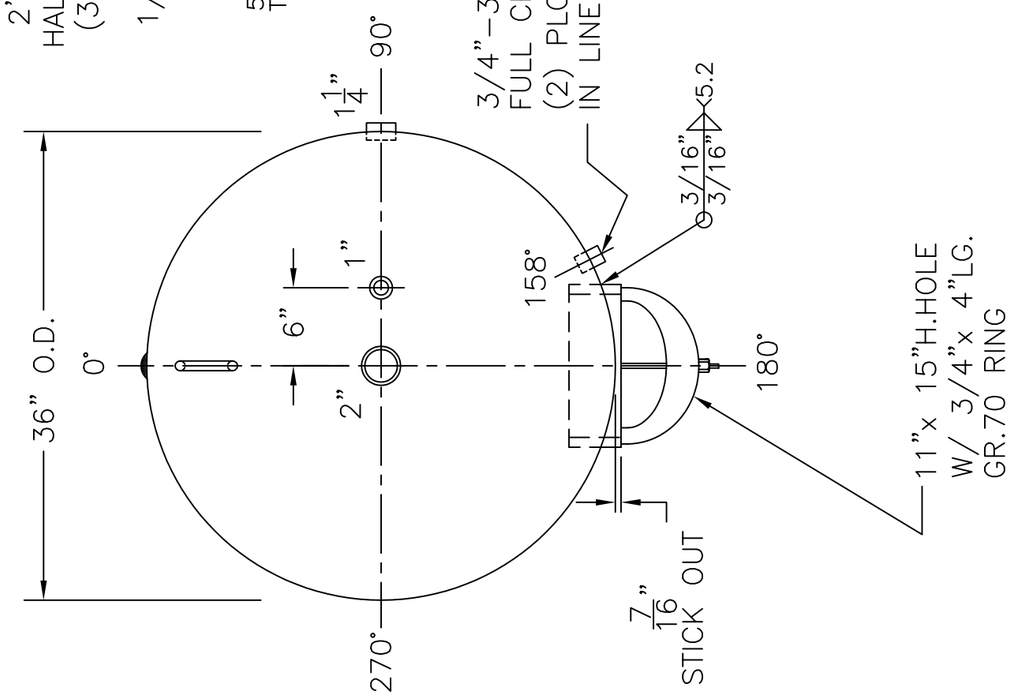

SHELL / HEADS	.182" SA-455 2:1 S.E.
	JOGGLE - .149 OFFSET
SHELL	.166" SA-414-G
	(.164" MIN.)
M.A.W.P. 160 PSIG. @ 210 °F	
ASME. SECTION IV 2004 ADD 2006	
X-RAY: RT-NO / H.L.W.	
GALLONS: 400	WT. 1394 LBS.
SERIAL NO.	
N.B.	

CS-36-400-V	REV. 1-17-07
	DATE: 8-12-98
FOR: HANSON STANDARD	
VERT. HOT WATER TANK	
99.0 SQ. FT. SURFACE AREA. THIS TANK IS SHIPPED WITH ALL OPENINGS SEALED. THE CEMENT LINING MUST BE KEPT MOIST BEFORE, DURING, AND AFTER INSTALLATION TO PREVENT CRACKING OF THE CEMENT.	
INSIDE: CEMENT LINED	
OUTSIDE: PRIME	
(379) LEG-ZONE 4-15 KM.	
CAD-"B" UNDER "STD"-SERIES	
BY: E.S.	SCALE: 1"=12"

ROY E. HANSON JR. MFG.
1600 E. WASHINGTON BLVD.
LOS ANGELES, CA 90021