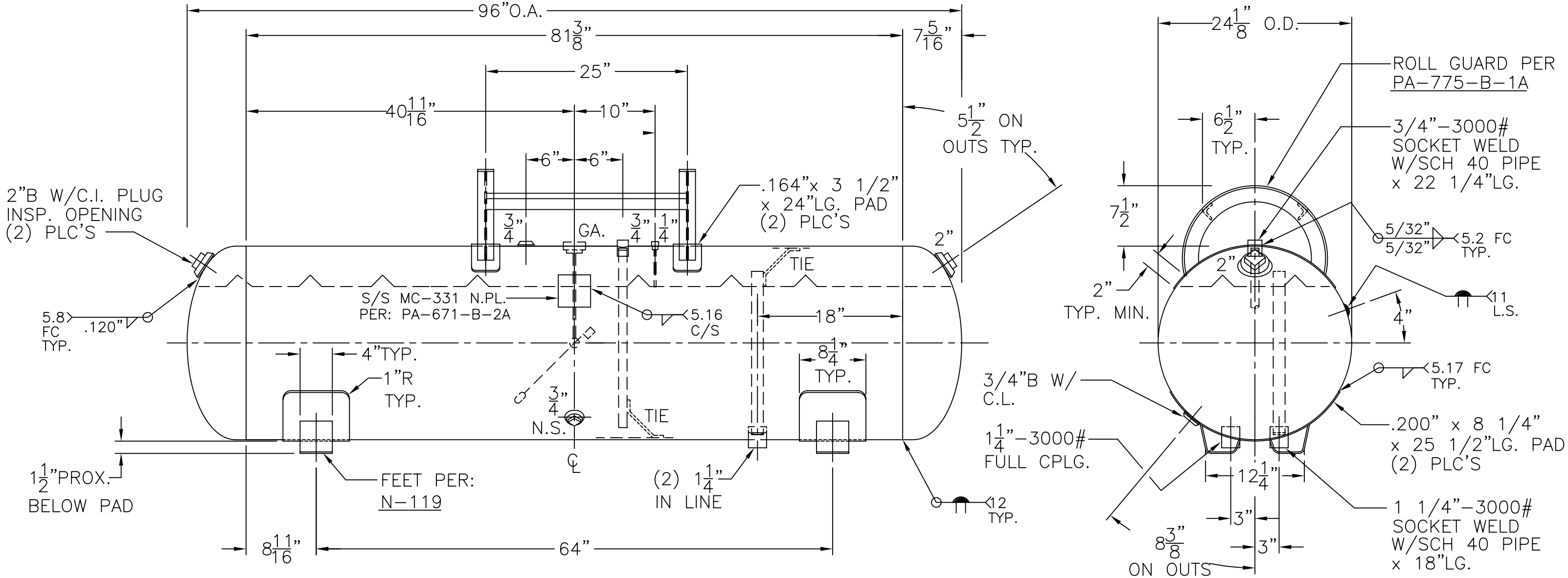

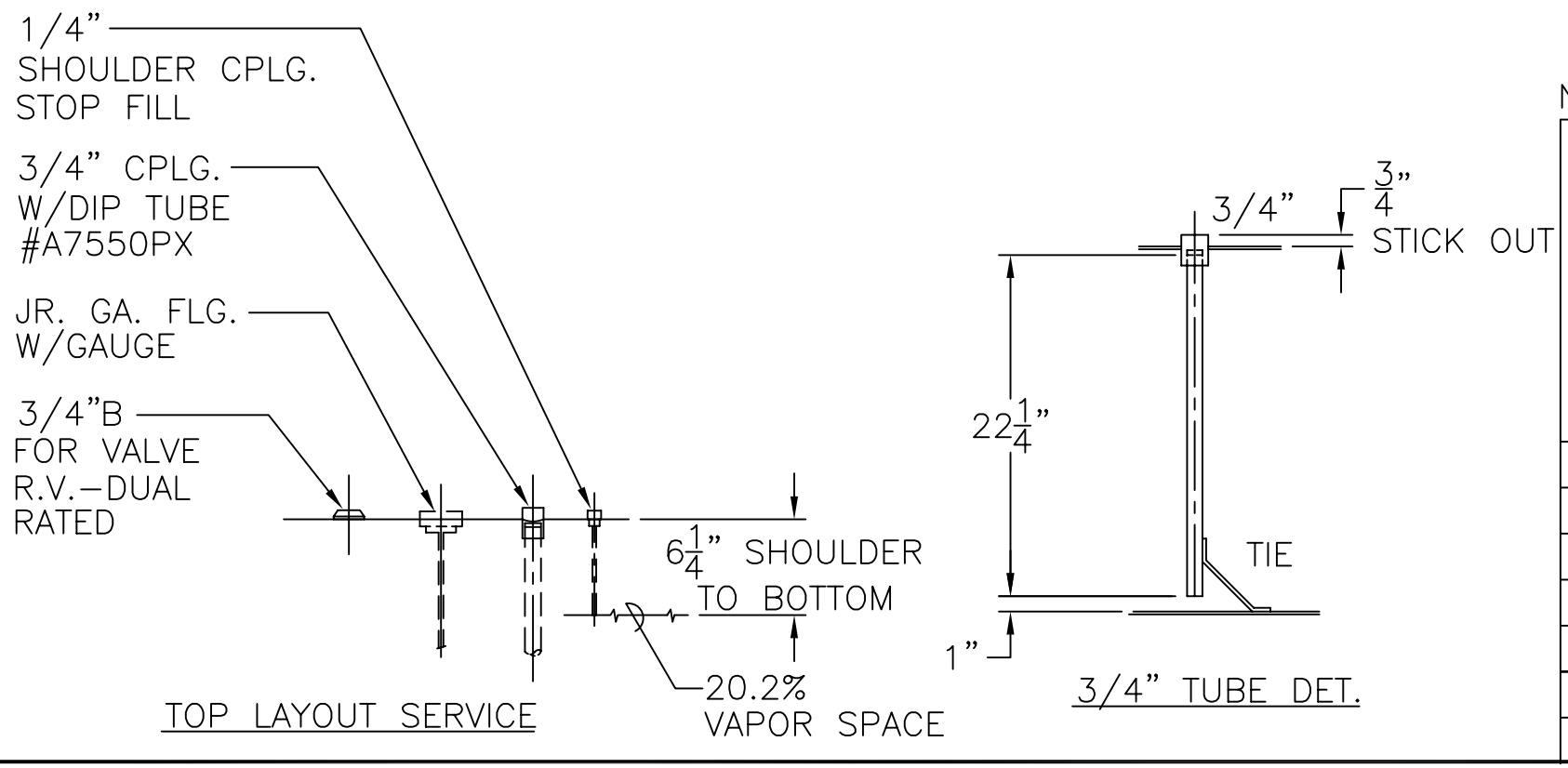

3) 4:1 SAFETY SPEC. MC-331
2) D.T. = 63"
NOTE: 1) HYDRO @ 375 PSIG. MIN.

SHELL / HEADS	.195" SA-455 2:1 S.E.	
	JOGGLE - 208 OFFSET	
	.200" SA-455	
	(.189" MIN.)	
M.A.W.P.	250 PSIG. @ 200 °F	
M.D.M.T.	-20 °F @ 250 PSIG.	
ASME. SECTION VIII DIV. 1, 2004 ADD 2006		
X-RAY: RT-4 SPOT L.S. ONLY		
GALLONS: 175	WT. 550 LBS.	
SERIAL NO.		
N.B.		

PA-631-B	REV. 5-20-10
	DATE: 3-23-94
FOR: -	
HORIZ. PROPANE TANK	
SURFACE AREA = 52.9 SQ. FT.	
1390.0 C.F.M. REQ'D (NOTE: 2)	
INSIDE: UNPAINTED, DEHYDRATED	
OUTSIDE: PRIME	
BY: J.G./B.C.	SCALE: 1"=12"

ROY E. HANSON JR. MFG.
1600 E. WASHINGTON BLVD.
LOS ANGELES, CA 90021