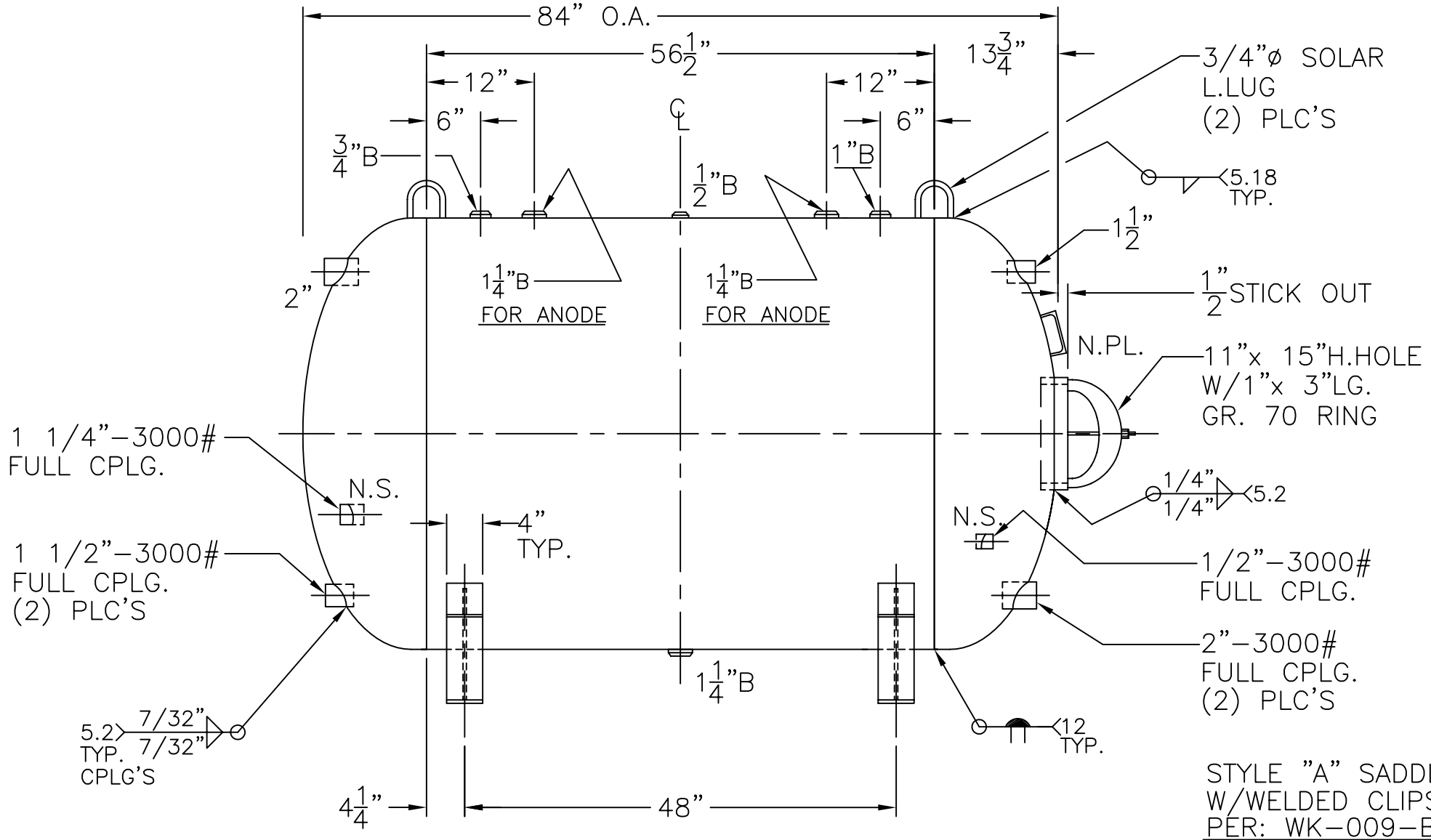

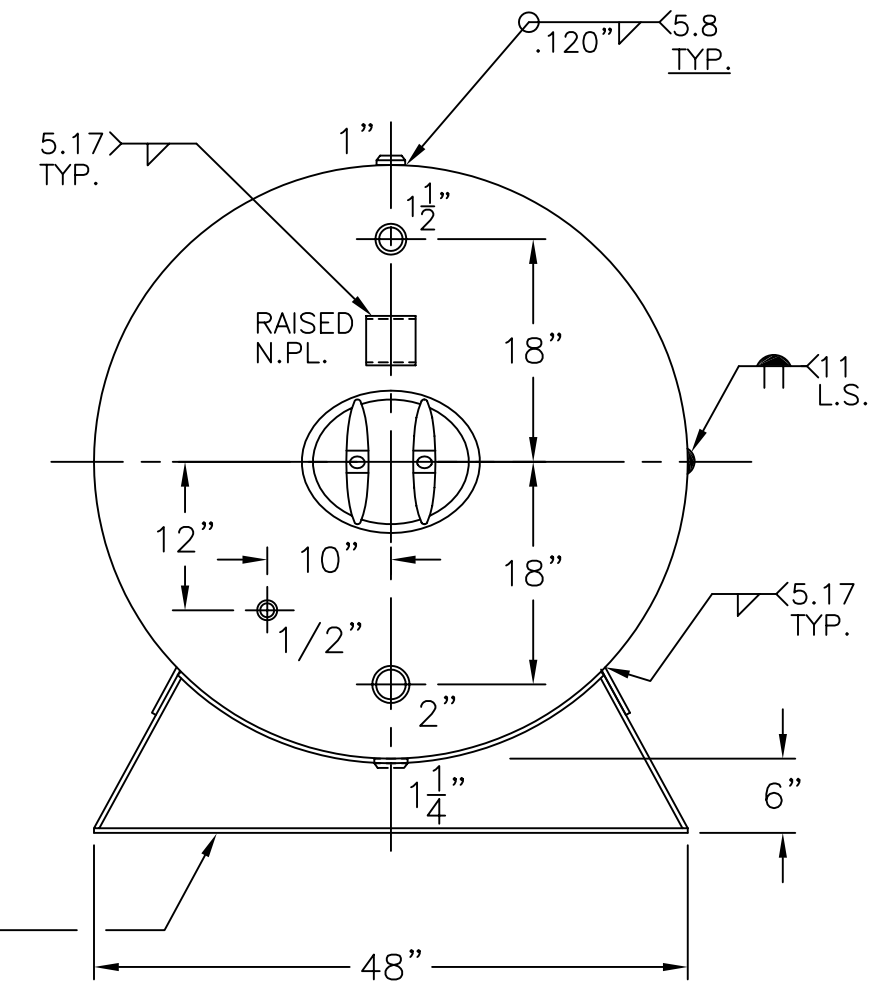

STYLE "A" SADDLES
W/WELDED CLIPS
PER: WK-009-B-1A

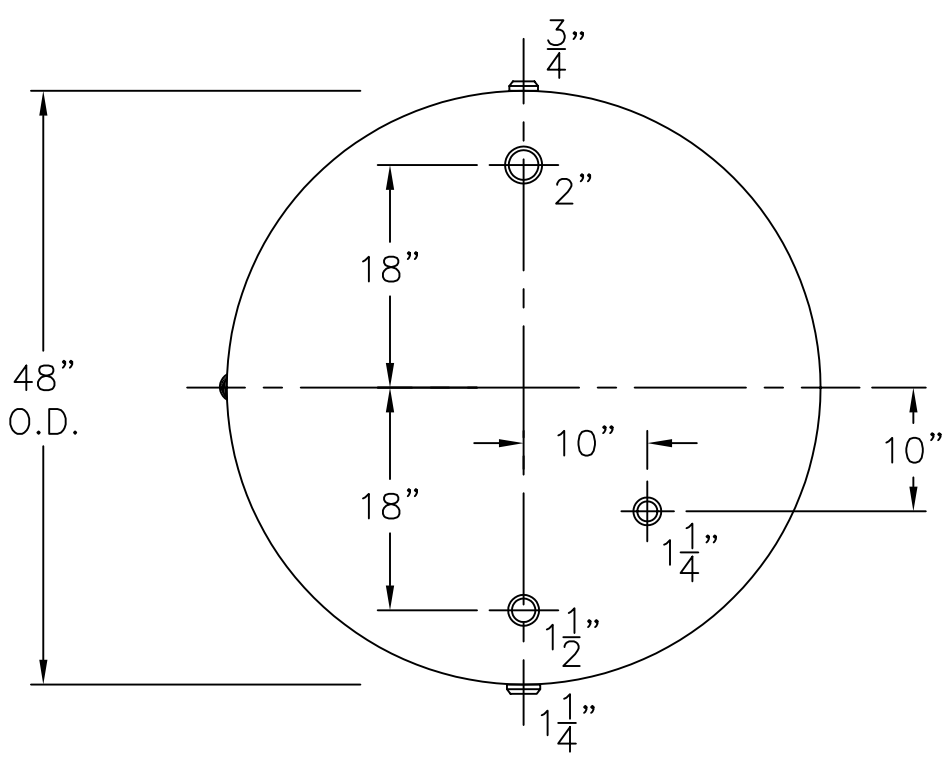

VIEW W/OUT SUPPORTS

3) 5-6-04 PROOF TEST.
2) SHIP LOOSE W/(2) 1 5/16"x 48"LG. FLEX. MAG. ANODES.
NOTE: 1) HYDRO @ 188 PSIG. MIN. TO 197 PSIG. MAX.

SHELL / HEADS	.245" SA-455 2:1 S.E.	WM-391-B REV. 7-29-08
	JOGGLE	DATE: 7-28-08
		FOR: -
		HORIZ. HOT WATER TANK.
	.164" SA-414-G	SURFACE AREA = 97.5 SQ. FT.
		INSIDE: GLASS LINED
M.A.W.P.	125 PSIG. @ 210°F	
		OUTSIDE: PRIME
ASME. SECTION IV	2007 ADD 2007	
X-RAY:	RT-NO / H.L.W.	BY: J.G. / C.J. SCALE: 3/4"=12"
GALLONS:	584 WT. 1144 LBS.	ROY E. HANSON JR. MFG.
SERIAL NO.		1600 E. WASHINGTON BLVD.
N.B.		LOS ANGELES, CA 90021