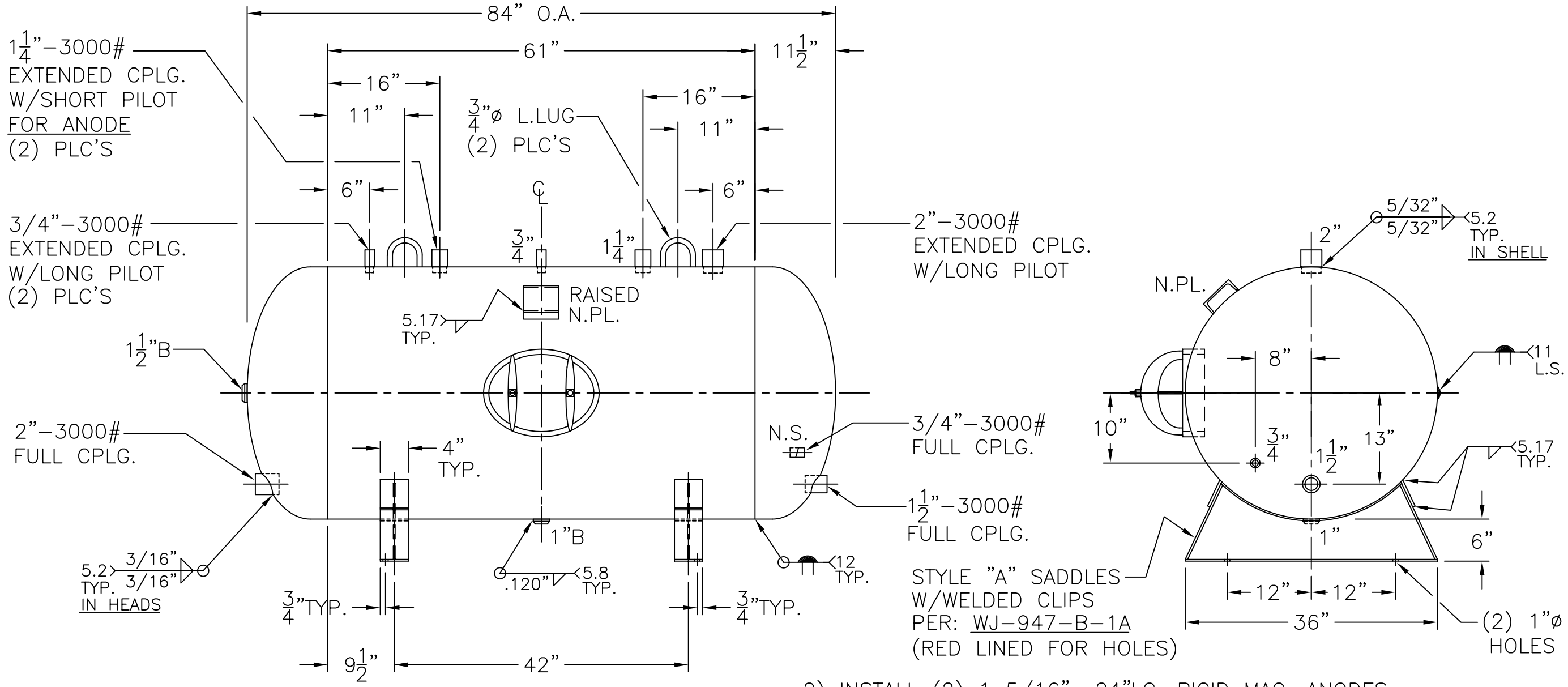

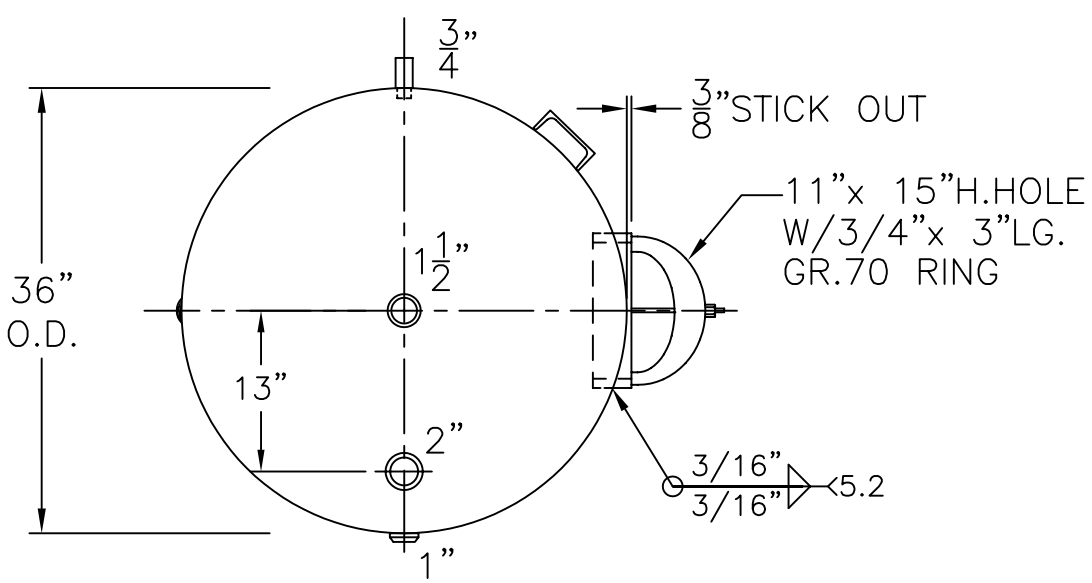

VIEW W/OUT SUPT'S

2) INSTALL (2) 1 5/16"x 24"LG. RIGID MAG. ANODES.
NOTE: 1) HYDRO @ 188 PSIG. MIN. TO 197 PSIG. MAX.

SHELL / HEADS	.182" SA-414-F 2:1 S.E.	WM-695-B
	JOGGLED - .159 OFFSET	REV. 7-31-09
		DATE: 5-14-09
		FOR: -
		HORIZ. HOT WATER TANK
	.149" SA-414-G	SURFACE AREA = 70.6 SQ. FT.
		INSIDE: GLASS LINED
M.A.W.P. 125 PSIG. @ 210 °F		
		OUTSIDE: S. BLAST, INORGANIC
ASME. SECTION IV 2007 ADD. 2008		ZINC PRIME
X-RAY: RT-NO/H.L.W.		BY: J.G./C.J. SCALE:3/4"=12"
GALLONS: 335	WT. 687 LBS.	ROY E. HANSON JR. MFG.
SERIAL NO.		1600 E. WASHINGTON BLVD.
N.B.		LOS ANGELES, CA 90021