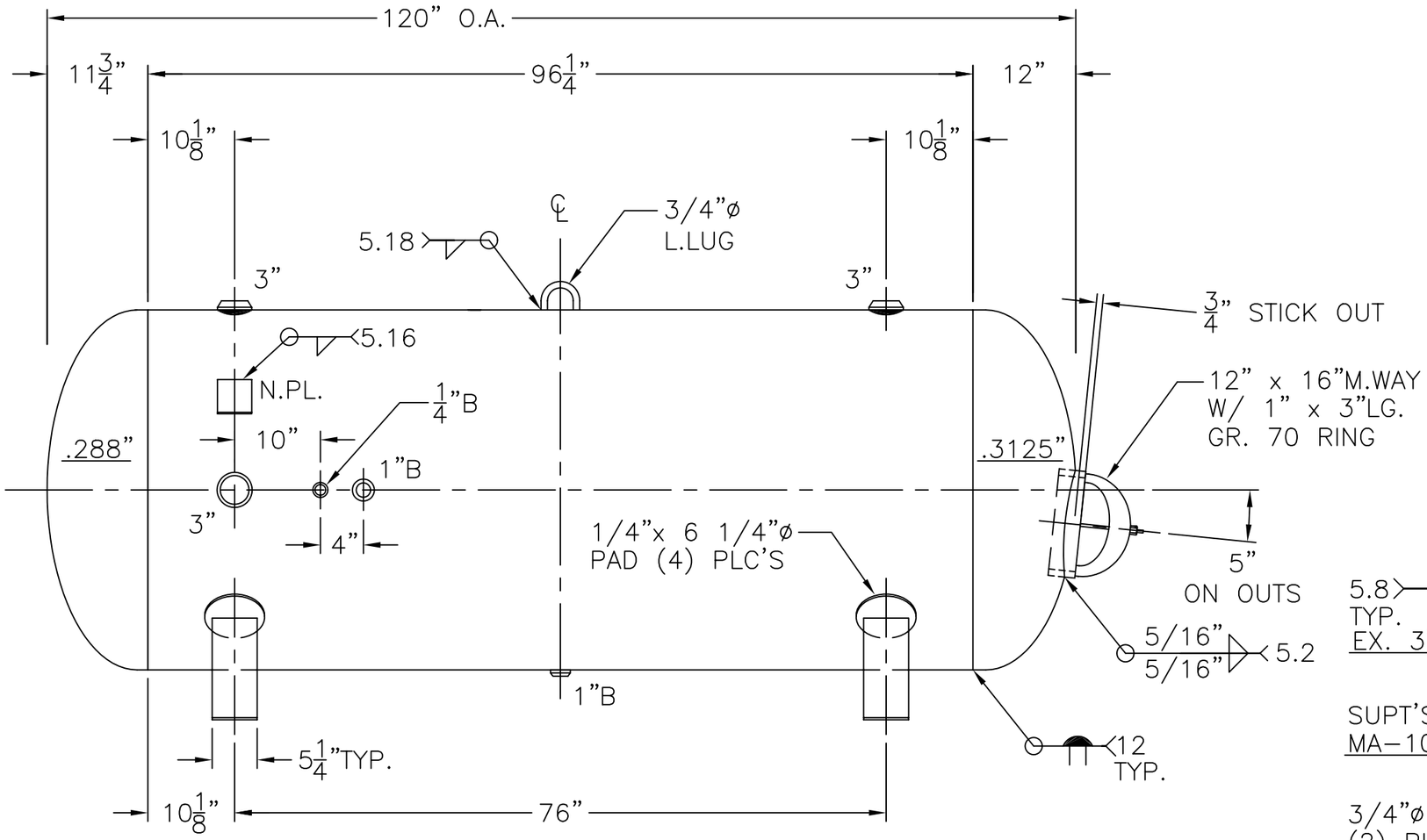


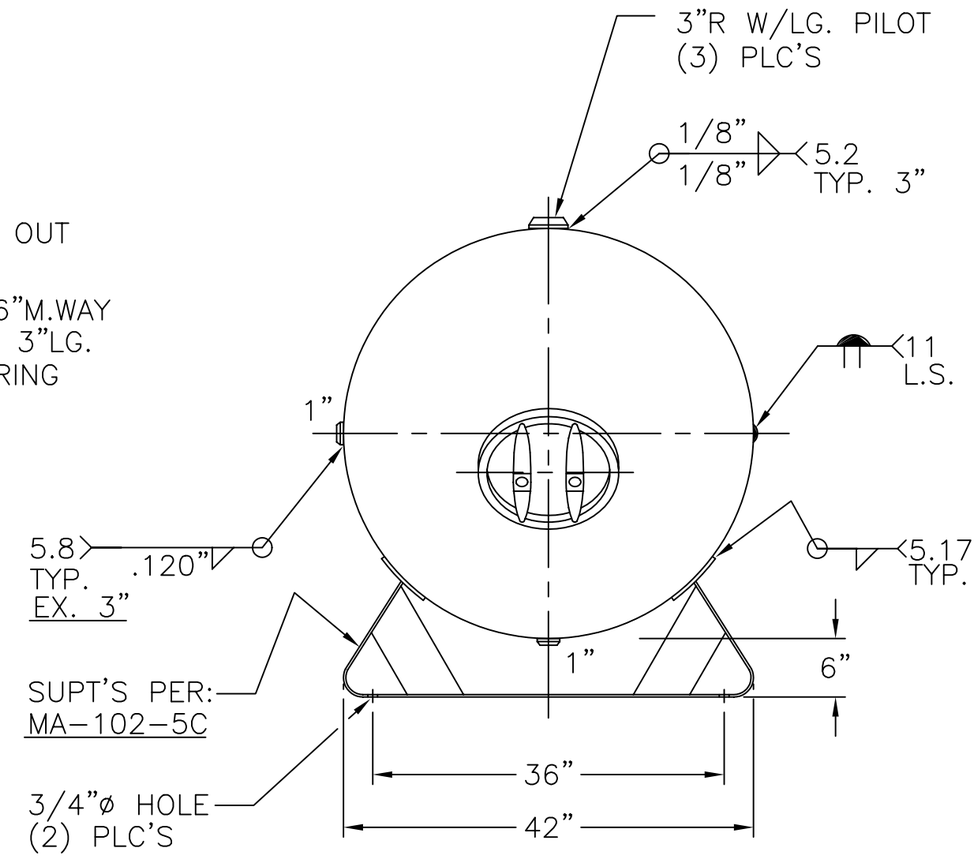


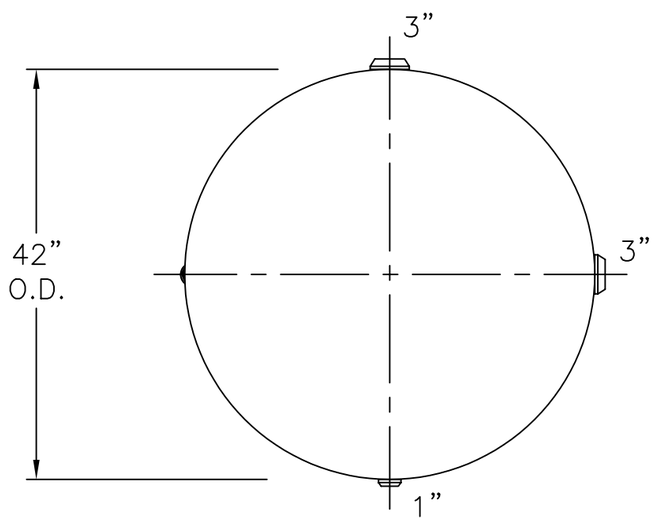


VIEW W/OUT SUPT'S

NOTE: 1) HYDRO @ 358 PSIG. MIN.

| | | |
|---|---|---|
| SHELL/HEADS | LEFT-.288" SA-455 2:1 S.E. | |
| | (.267" MIN.)-JOGGLE | |
| | RIGHT-.3125" SA-455 2:1 S.E. | |
| | (.310" MIN.)-TRIM | |
| | .337" SA-455 | |
| | (.316" MIN.) | |
| M.A.W.P. | 275 PSIG. @ 400 °F | |
| M.D.M.T. | -20 °F @ 275 PSIG. | |
| ASME. SECTION VIII DIV. 1, 2001 ADD. 2002 | | |
| X-RAY: RT-4 SPOT L.S. & BOTH G.S. | | |
| GALLONS: 660 | WT. 1781 LBS. | |
| SERIAL NO. | | |
| N.B. | | |

| | |
|---|---|
| 42-HE-660-W | REV. 11-26-02 |
| | DATE: 9-2-80 |
| FOR: HANSON STANDARD | |
| HORIZ. AIR TANK | |
| | |
| INSIDE: UNPAINTED | |
| | |
| OUTSIDE: PRIME | |
| CAD-"B" UNDER "STD"-SERIES | |
| BY: E.S. | SCALE: 3/4"=12" |

**ROY E. HANSON JR. MFG.**
1924 COMPTON AVE.
LOS ANGELES, CA 90011